Banba bandgap voltage reference design

Student: Silaghi Sergiu

Technical University of Cluj-Napoca

February 23, 2026

Table of contents

1. Requirements
2. Bandgap design
3. OTA Miller design
4. DCOP simulation
   - **4.1.** Start-up circuit
5. Stability simulation
6. PVT variations
   - **6.1.** Temperature sweep
   - **6.2.** VDD variation
   - **6.3.** Monte Carlo (process variation)
7. Transient simulation
8. PSRR
9. 2nd order compensation
10. Results

Requirements

Bandgap type	OTA type	Quiescent current	Precision	Output voltage	Supply voltage
Banba	Miller	30μA	+/-3%	1.2V	1.8V

Table 1. Project requirements

Bandgap design

$$\frac{\partial V_{BG}}{\partial T} = \frac{\partial V_{BE}}{\partial T} + m \cdot \frac{\partial V_T}{\partial T}$$

Zero temperature coefficient:

$$\frac{\partial V_{BG}}{\partial T} = 0 \Rightarrow m = -\frac{\partial V_{BE}/\partial T}{\partial V_T/\partial T} \cong 23$$

$$\begin{cases} \partial V_{BE}/\partial T = -2mV/°C \\ \partial V_{BE}/\partial T = 0.086mV/°C \end{cases}$$

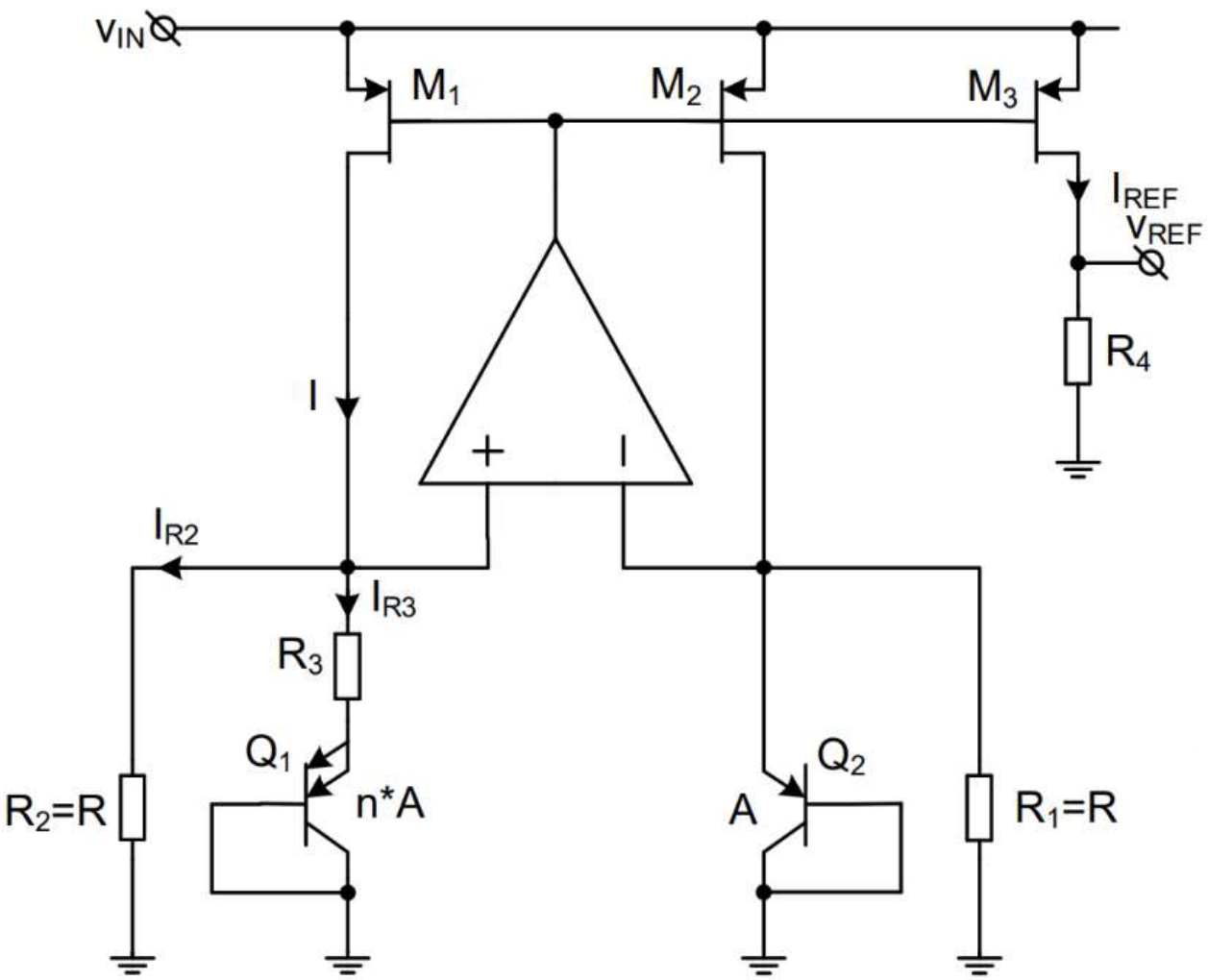

Figure 1. Banba bandgap

Bandgap design

Having the output voltage expression:

$$V_{BG} = \frac{R_4}{R_2} V_{EB_2} + \frac{R_4}{R_3} V_T \ln(n)$$

$$\Rightarrow \frac{\partial V_{BG}}{\partial T} = \frac{R_4}{R_2} \frac{\partial V_{EB_2}}{\partial T} + \frac{R_4}{R_3} \ln(n) \frac{\partial V_T}{\partial T}$$

$$\frac{R_2}{R_3} \ln(n) = -\frac{\partial V_{EB_2} / \partial T}{\partial V_T / \partial T} \cong 23$$

$$\Rightarrow R_1 = R_2 \cong 23 \frac{R_3}{\ln(n)} \qquad (1)$$

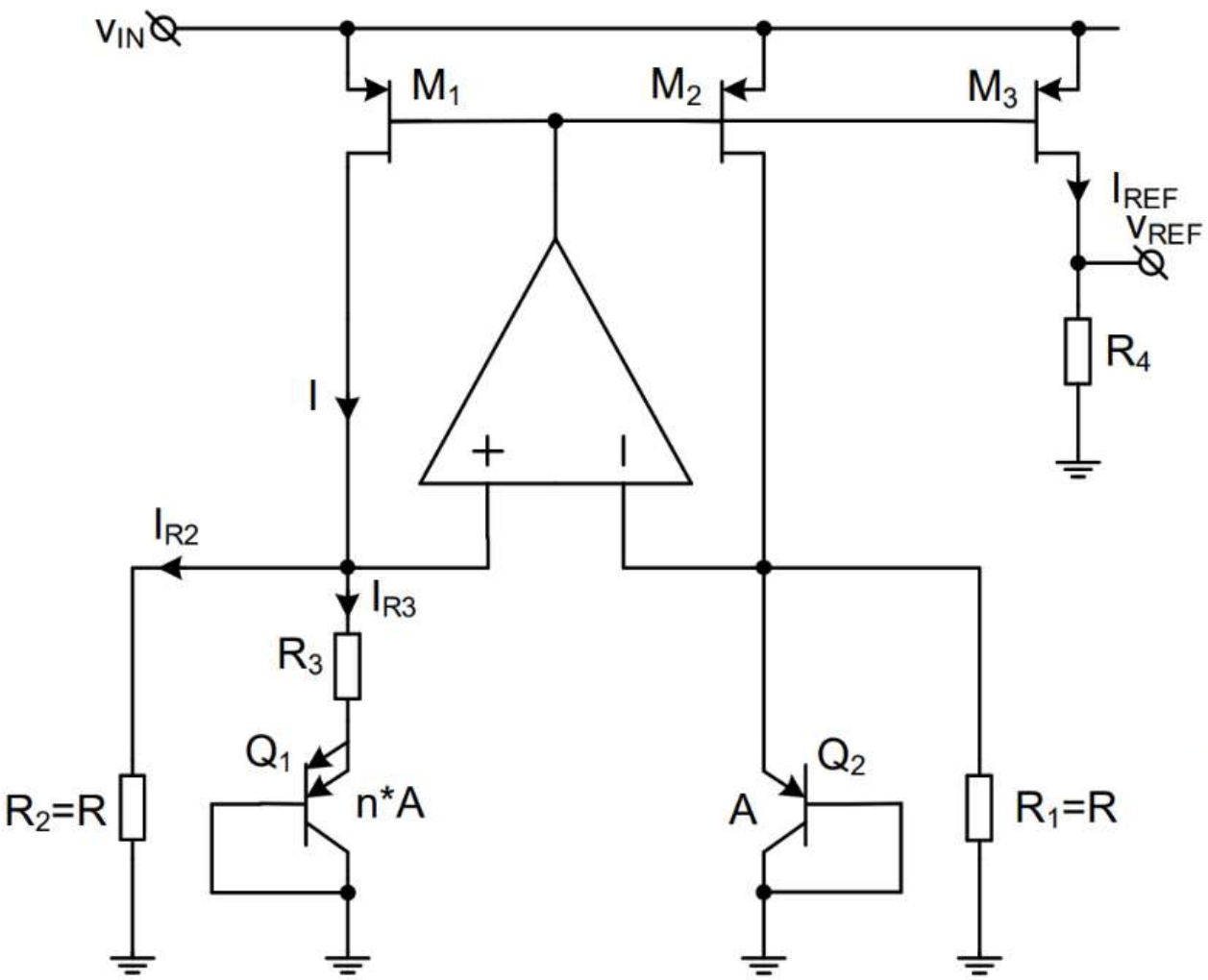

Figure 2. Banba bandgap

Bandgap design

$$By\ choice\ R_3 = 30k\Omega\ and\ n = 10$$
$$using\ (1) \Rightarrow R_1 = R_2 \cong 300k\Omega$$

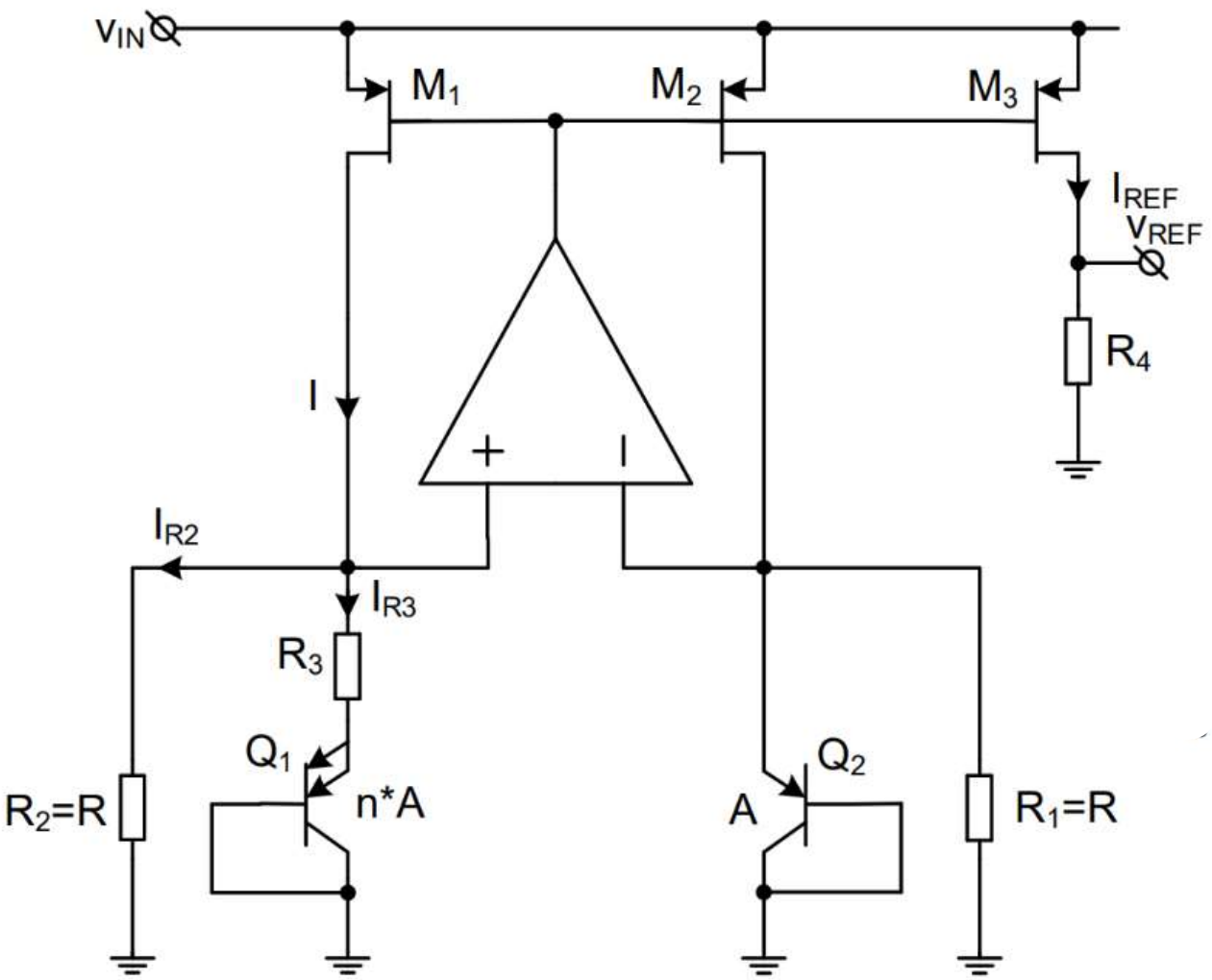

Figure 3. Banba bandgap

Bandgap design

$$I_{CTAT} = I_{R_1} = I_{R_2} = \frac{V_{EB_2}}{R_1}$$

$$I_{PTAT} = I_{R_3} = \frac{V_T \ln(n)}{R_3}$$

$$I_{REF} = I_{CTAT} + I_{PTAT}$$

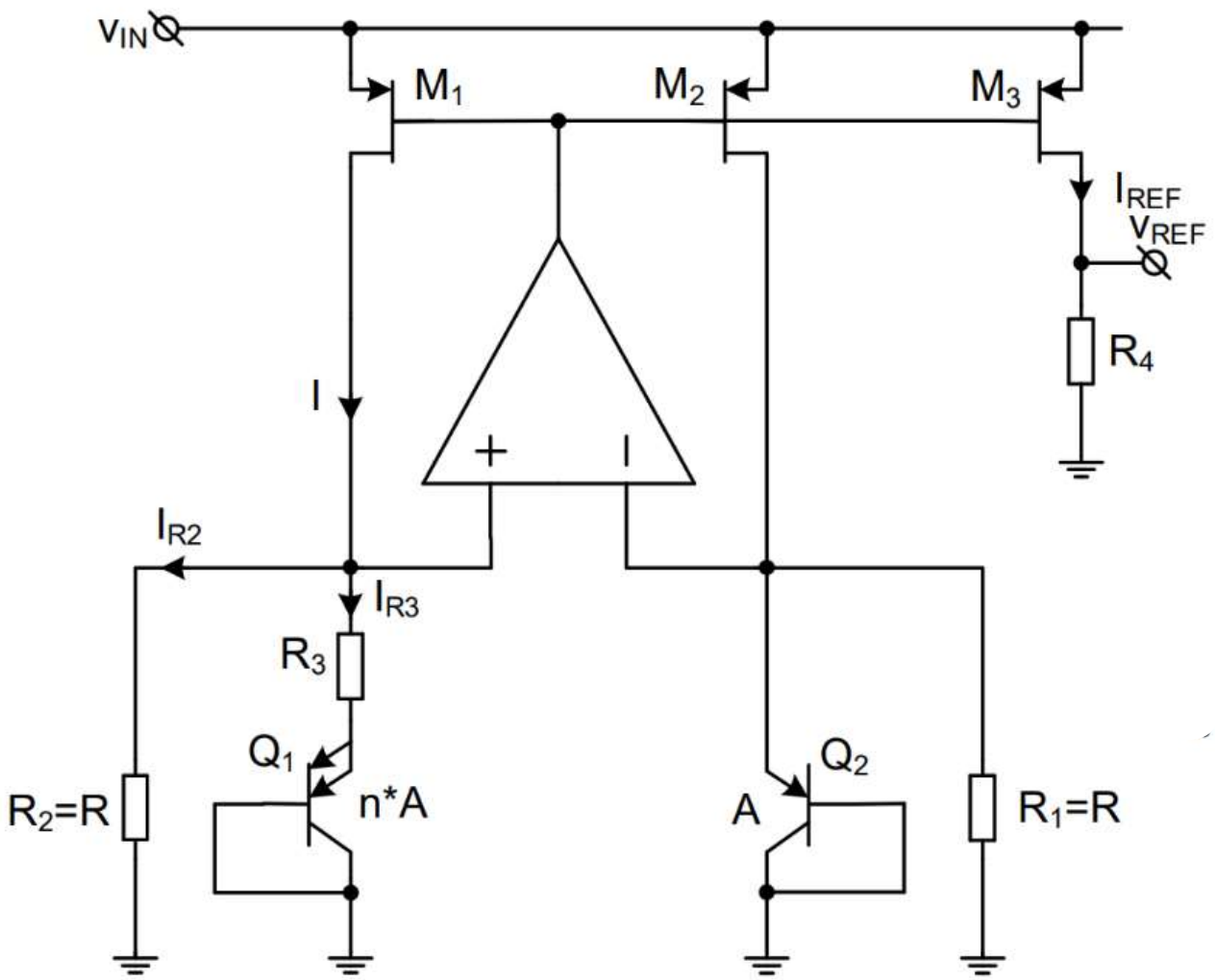

Figure 4. Banba bandgap

Bandgap design

Check if $I_{BG_core} \leq 15\text{uA}$:

$$\mathrm{I_{CTAT}} = \frac{0{,}6\mathrm{V}}{300k\Omega} \cong 2\mu A$$

$$\mathrm{I_{PTAT}} = \frac{26\mathrm{mV} \cdot 2.3}{30k\Omega} \cong 2\mu A$$

$$\mathrm{I_{CTAT}} \cong \mathrm{I_{PTAT}} \cong 2\mu A \Rightarrow \mathrm{I_{REF}} = 4\mu$$

$$I_{D_1} \cong I_{D_2} \cong I_{D_3} \cong I_{REF} = 4\mu A$$
$$\Rightarrow\Rightarrow I_{BG_core} = 12\mu A \leq \ 15\mu A$$

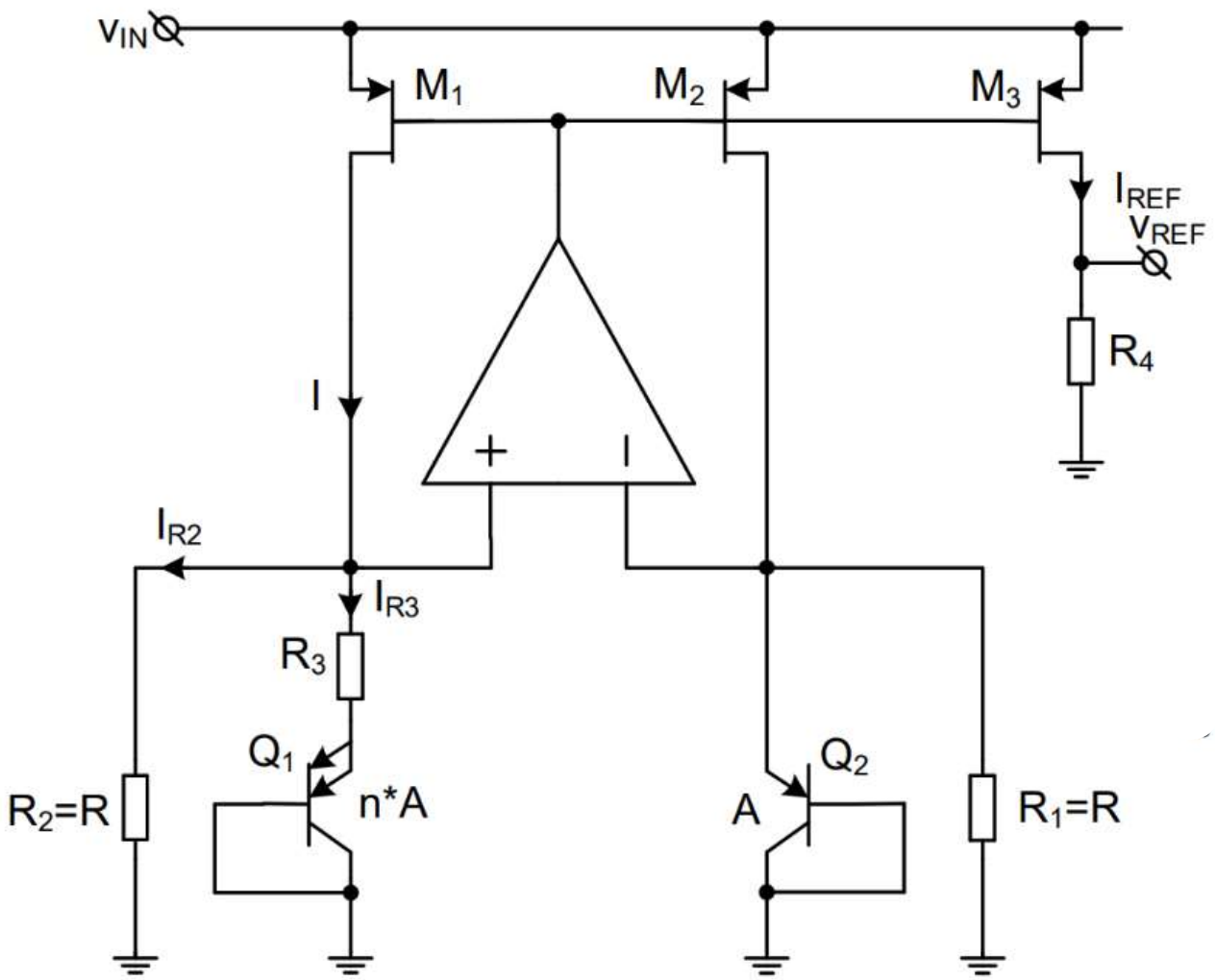

Figure 5. Banba bandgap

Bandgap design

R_4 sizing:

$$R_4 = \frac{V_{BG}}{I_{REF}}$$

$$R_4 = \frac{1.2V}{4uA}$$

$$R_4 = 300k\Omega$$

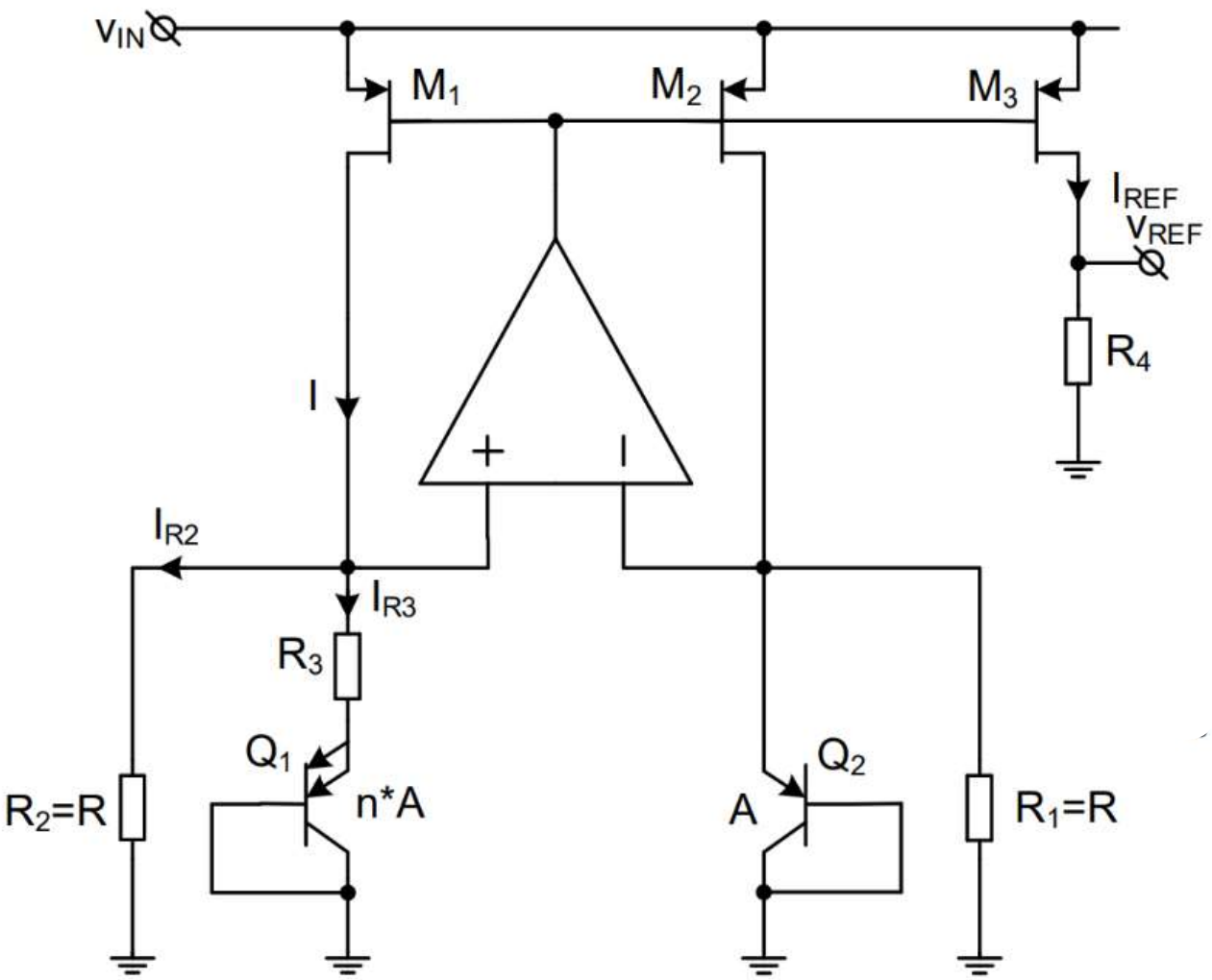

Figure 6. Banba bandgap

Bandgap design

$$M_1 = M_2 = M_3\ (PMOS)$$

$$I_{D_1} = I_{D_2} = I_{D_3} = I_{REF} = 4\mu A$$

$$V_{Dsat_1} = V_{Dsat_2} = V_{Dsat_3} = 150mV$$

$$\Rightarrow \left(\frac{W}{L}\right)_{1,2,3} = \frac{3.5\mu m}{1\mu m}$$

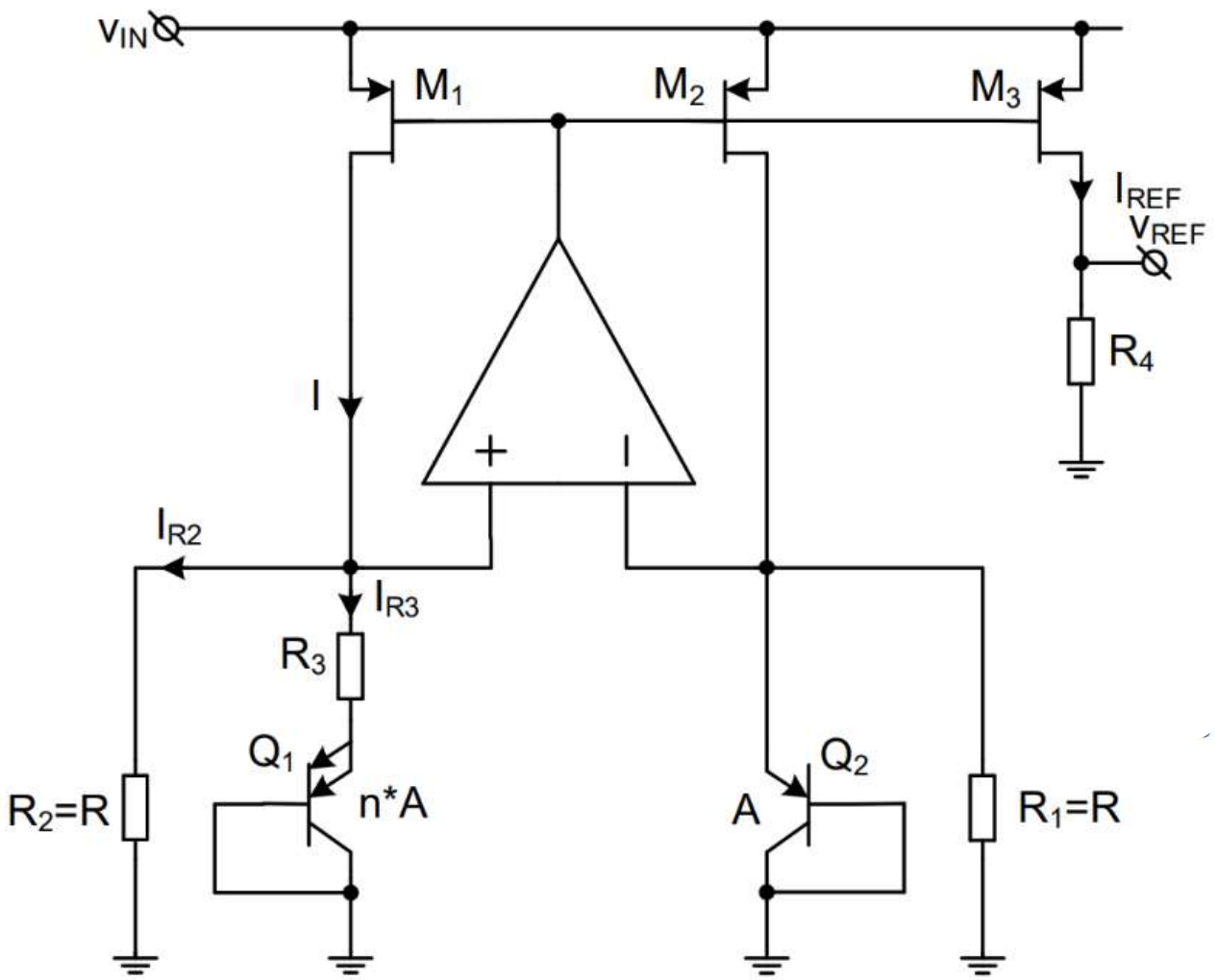

Figure 7. Banba bandgap

OTA Miller design

Main requirements:

- a0 > 60dB
- PM > 40 deg
- GM > 10dB
- CL = 1pF
- IAO=15 μA

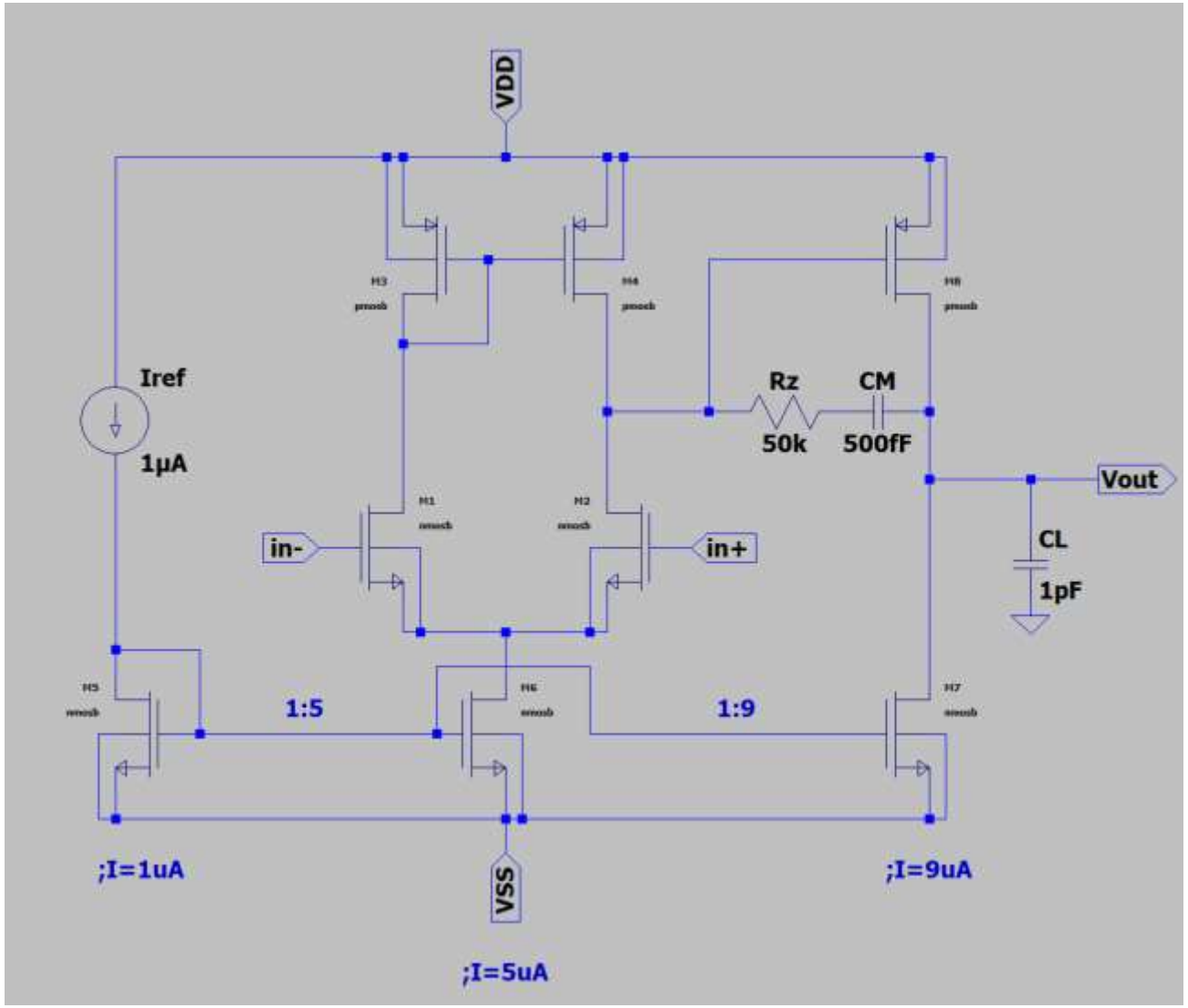

Figure 8. OTA Miller schematic

Reference table for MOS transistors

Type	IDref	(W/L)ref	VDsatref
NMOS	50μA	5μm/1μm	240mV
PMOS	50μA	15μm/1μm	257mV

Table 2. Reference set for MOS transistors

$$\frac{IDref}{ID} = \frac{(W/L)ref}{W/L}\left(\frac{VDsatref}{VDsat}\right)^2$$

M_5 sizing (NMOS):

Current budget = max. 15uA through AO ⇒ divided as shown in Figure 9 (1uA+5uA+9uA)

$$\frac{IDref}{ID} = \frac{(W/L)ref}{W/L}\left(\frac{VDsatref}{VDsat}\right)^2$$

$$V_{Dsat_5} = 150mV, \qquad I_{D_1} = 1\mu A$$

$$\Rightarrow \left(\frac{W}{L}\right)_5 = \frac{0.26\mu m}{1\mu m}$$

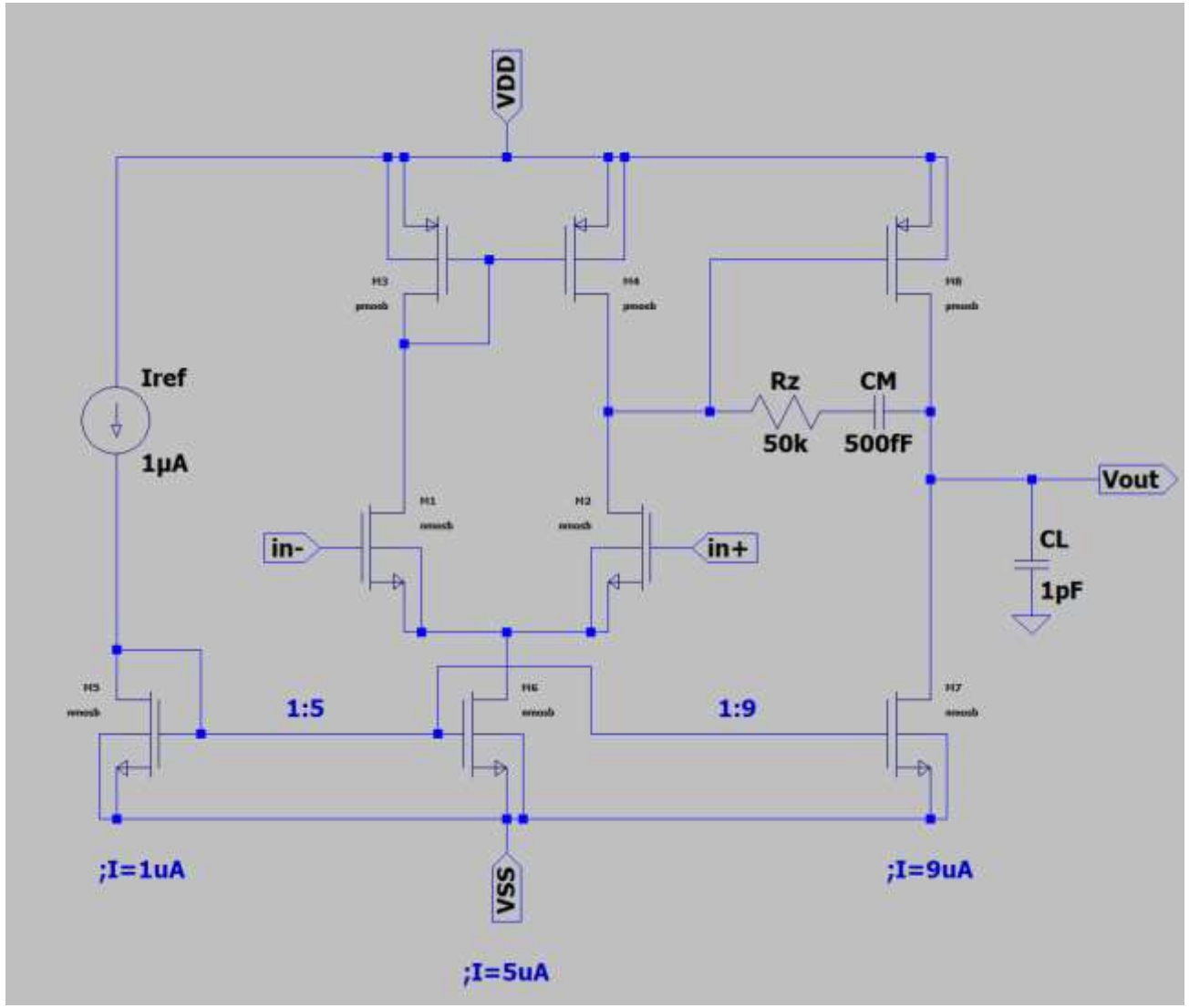

Figure 9. OTA Miller schematic

M_6 sizing (NMOS):

$$\frac{IDref}{ID} = \frac{(W/L)ref}{W/L}\left(\frac{VDsatref}{VDsat}\right)^2$$

$$V_{Dsat_6} = 150mV, \qquad I_{D_6} = 5 \cdot I_{D_5} = 5\mu A$$

$$\Rightarrow \left(\frac{W}{L}\right)_6 = 5 \cdot \left(\frac{W}{L}\right)_5 = \frac{1.3\mu\text{m}}{1\mu\text{m}}$$

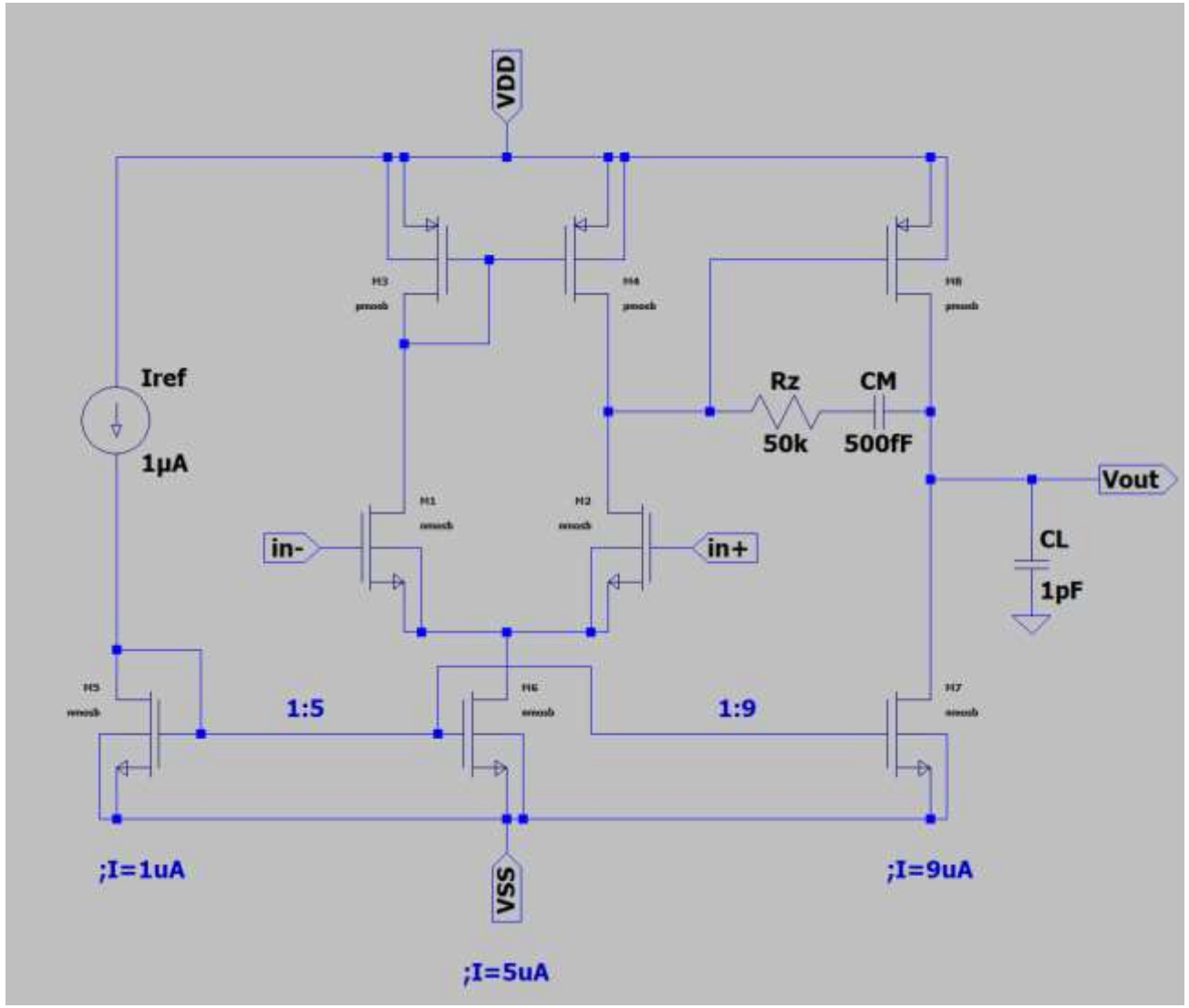

Figure 10. OTA Miller schematic

$M_{1,2}$ sizing (NMOS):

$$\frac{IDref}{ID} = \frac{(W/L)ref}{W/L}\left(\frac{VDsatref}{VDsat}\right)^2$$

$$g_{m_{1,2}} = \frac{2I_{D_{1,2}}}{V_{Dsat_{1,2}}}$$

Pentru $g_{m_{1,2}} \gg \Rightarrow V_{Dsat_{1,2}} \ll \Rightarrow$
$\Rightarrow V_{Dsat_{1,2}} = 50mV$

$$I_{D_{1,2}} = \frac{I_{D_6}}{2} = 2.5\mu A \quad \Rightarrow \left(\frac{W}{L}\right)_5 = \frac{5.76\mu m}{1\mu m}$$

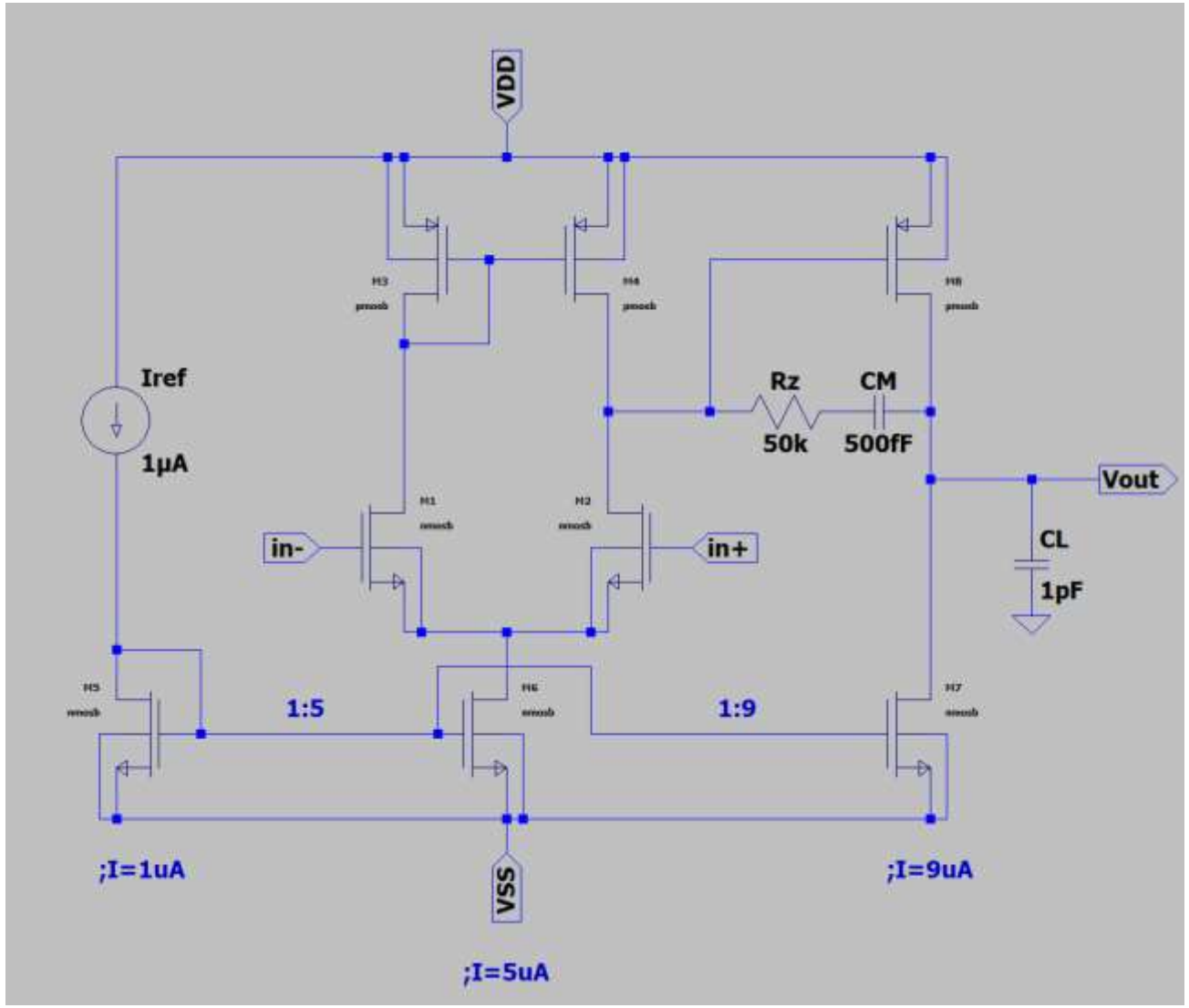

Figure 11. OTA Miller schematic

$M_{3,4}$ sizing (PMOS):

$$\frac{IDref}{ID} = \frac{(W/L)ref}{W/L}\left(\frac{VDsatref}{VDsat}\right)^2$$

$$V_{Dsat_{3,4}} = 150mV, \qquad I_{D_{3,4}} = I_{D_{1,2}} = 2.5\mu A$$

$$\Rightarrow \left(\frac{W}{L}\right)_{3,4} = \frac{2.19\mu m}{1\mu m}$$

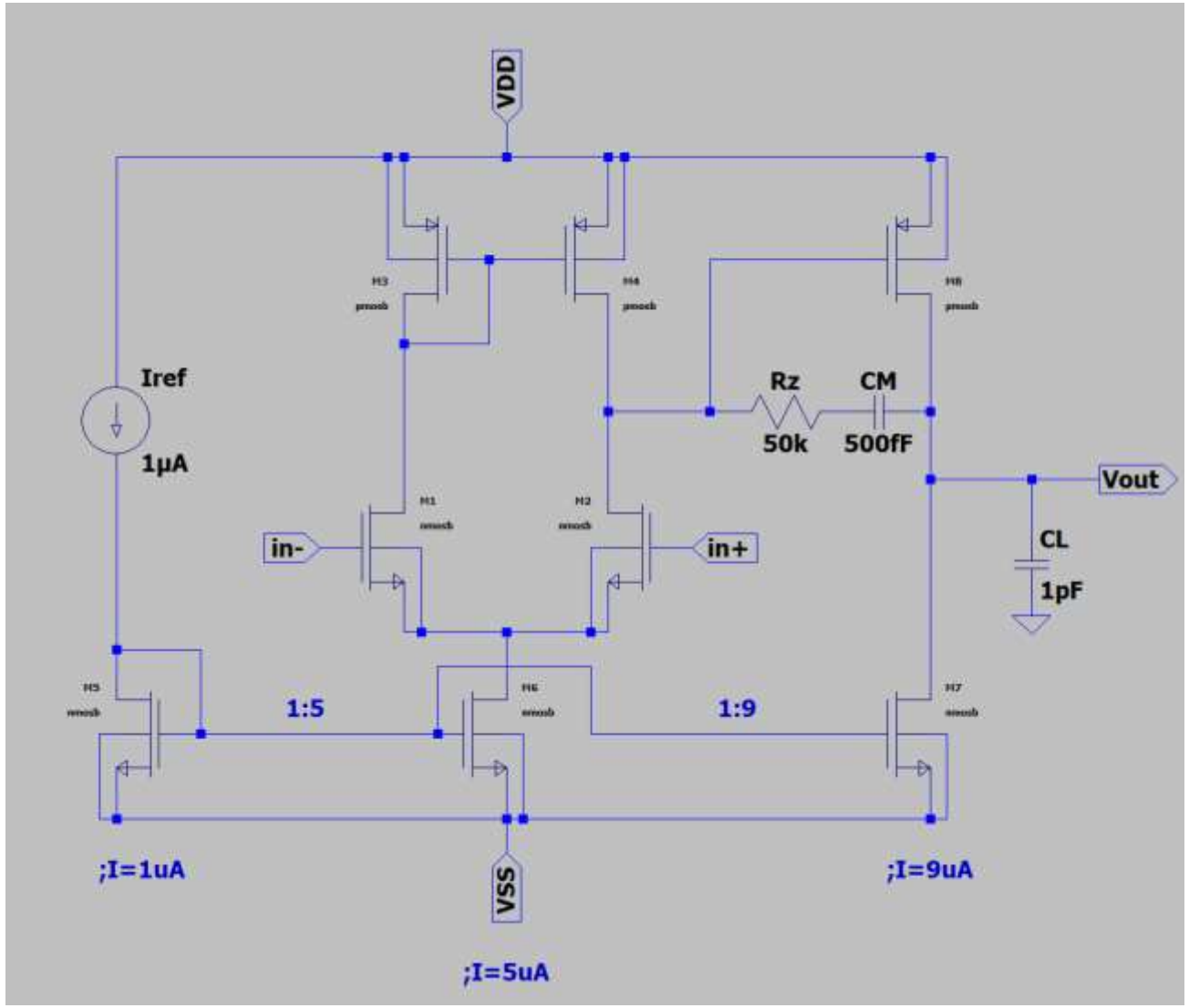

Figure 12. OTA Miller schematic

M_7 sizing (NMOS):

$$\frac{IDref}{ID} = \frac{(W/L)ref}{W/L}\left(\frac{VDsatref}{VDsat}\right)^2$$

$$V_{Dsat_7} = 150mV, \qquad I_{D_7} = 9\mu A$$

$$\Rightarrow \left(\frac{W}{L}\right)_7 = \frac{2.3\mu m}{1\mu m}$$

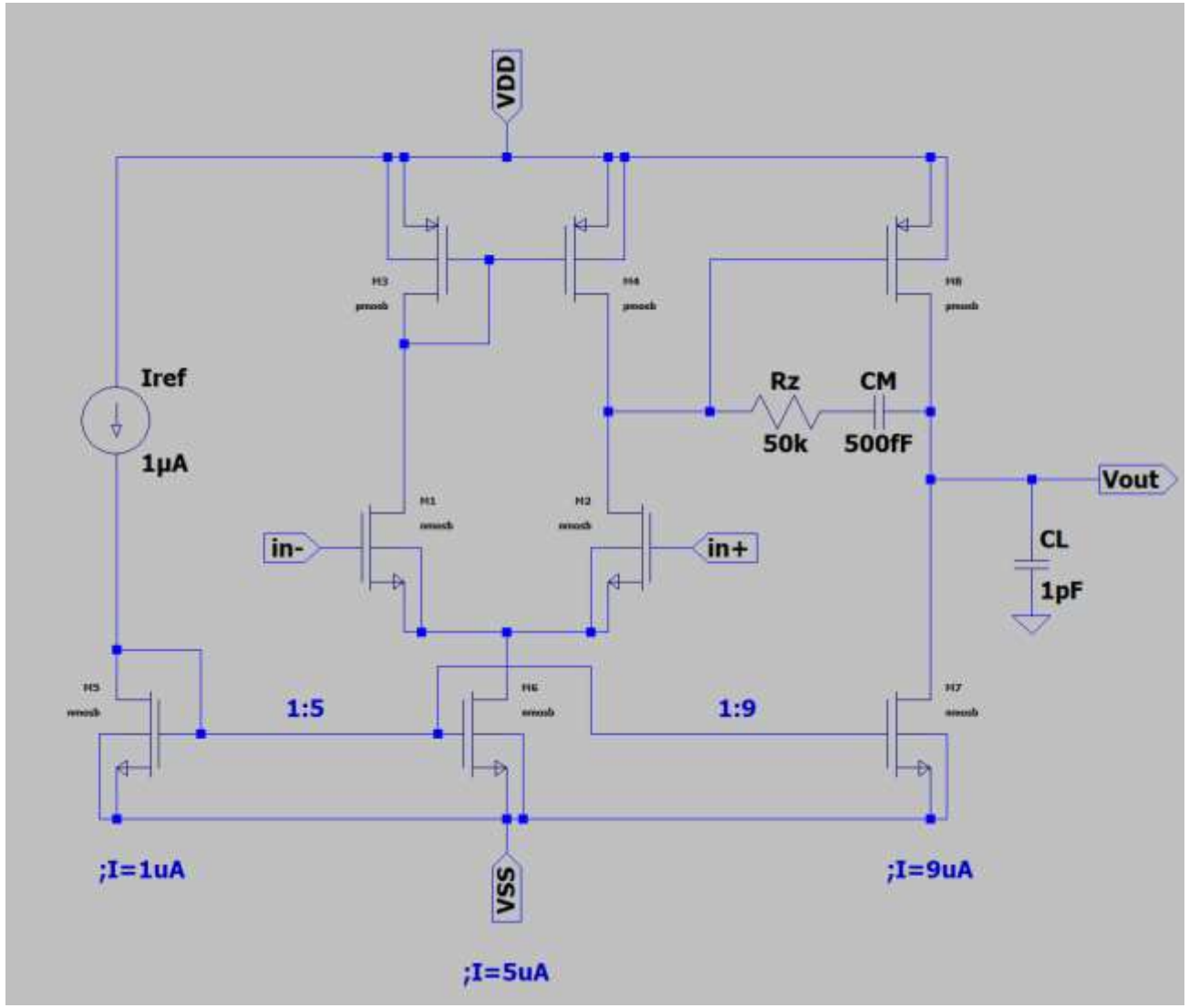

Figure 12. OTA Miller schematic

M_8 sizing (PMOS):

$$\frac{IDref}{ID} = \frac{(W/L)ref}{W/L}\left(\frac{VDsatref}{VDsat}\right)^2$$

$$V_{Dsat_8} = 150mV, \qquad I_{D_8} = 9\mu A$$

$$\Rightarrow \left(\frac{W}{L}\right)_8 = \frac{7.89\mu m}{1\mu m}$$

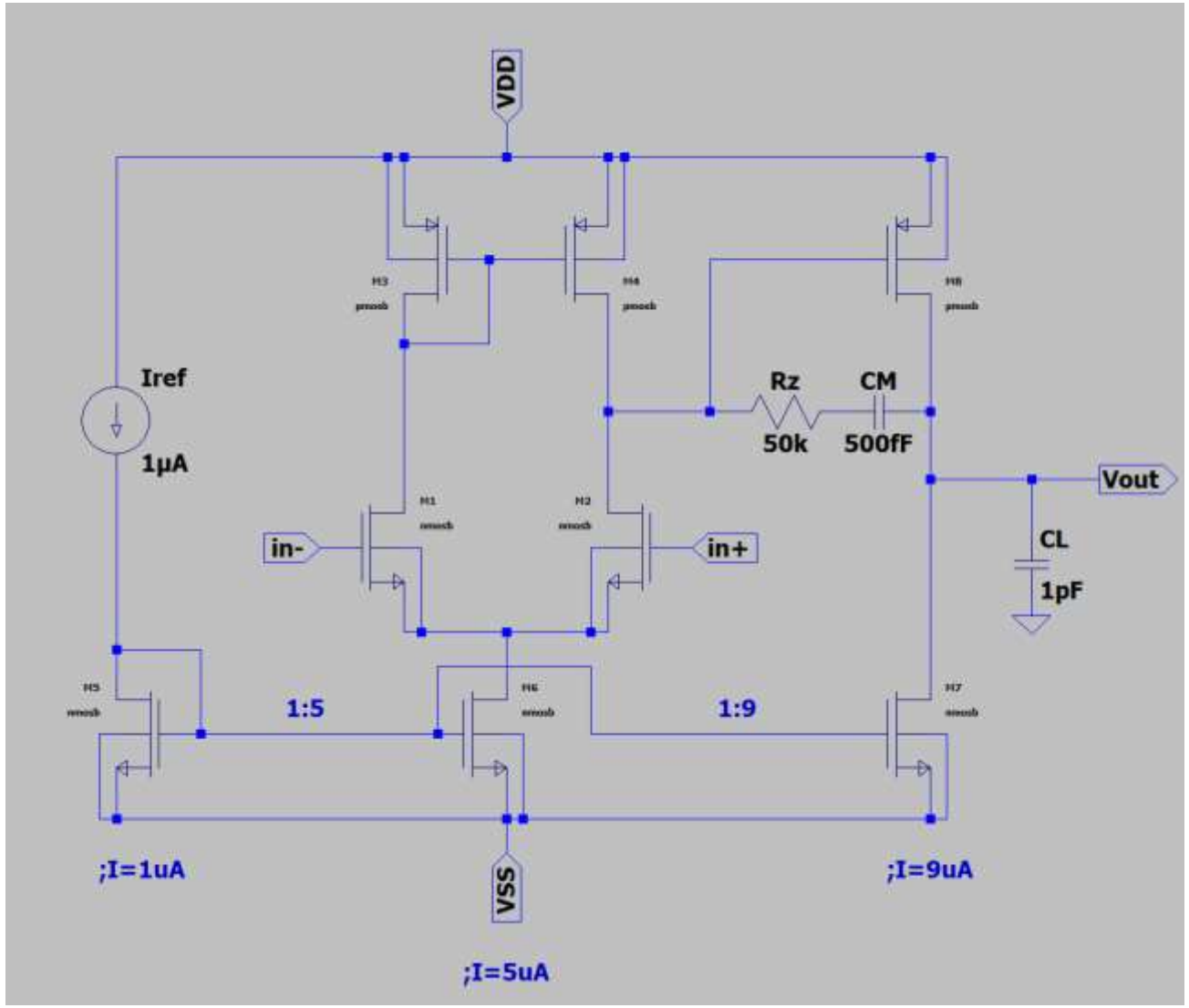

Figure 12. OTA Miller schematic

All transistors in saturation region

M	Id [A]	Vds [V]	Vdsat [V]	W [m]	L [m]
M1	2.39e-06	7.47e-01	6.45e-02	5.76e-06	1e-06
M2	2.39e-06	7.47e-01	6.45e-02	5.76e-06	1e-06
M3	2.39e-06	6.27e-01	1.57e-01	2.19e-06	1e-06
M4	2.39e-06	6.27e-01	1.57e-01	2.19e-06	1e-06
M5	1.00e-06	6.06e-01	1.48e-01	0.26e-06	1e-06
M6	4.78e-06	4.27e-01	1.50e-01	1.3e-06	1e-06
M7	8.76e-06	1.01e+00	1.50e-01	2.3e-06	1e-06
M8	8.76e-06	7.95e-01	1.60e-01	7.89e-06	1e-06

Table 3. Transistor parameters

DCOP simulation

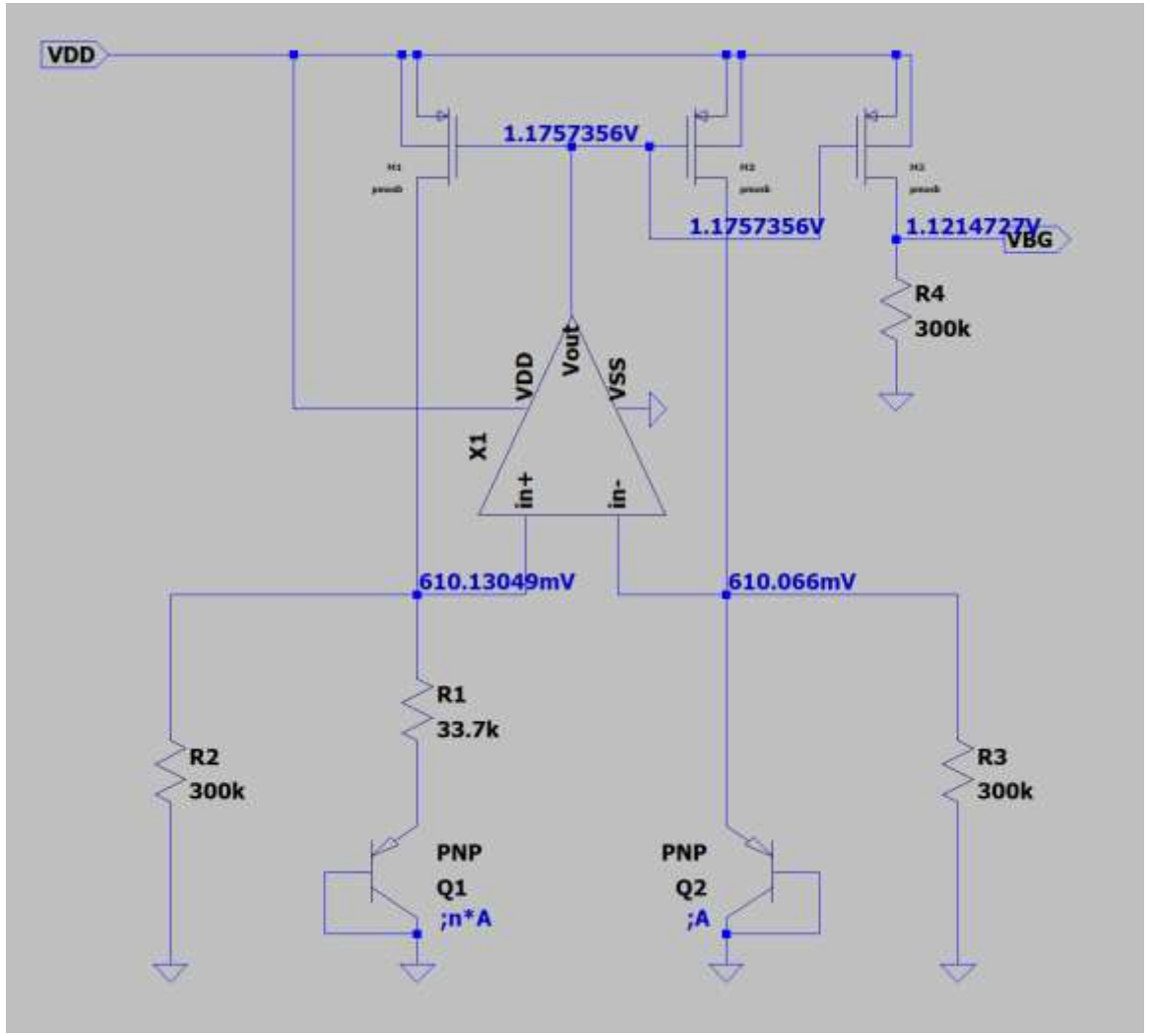

Figure 13. Banba bandgap with DCOP

DCOP simulation with start-up circuit

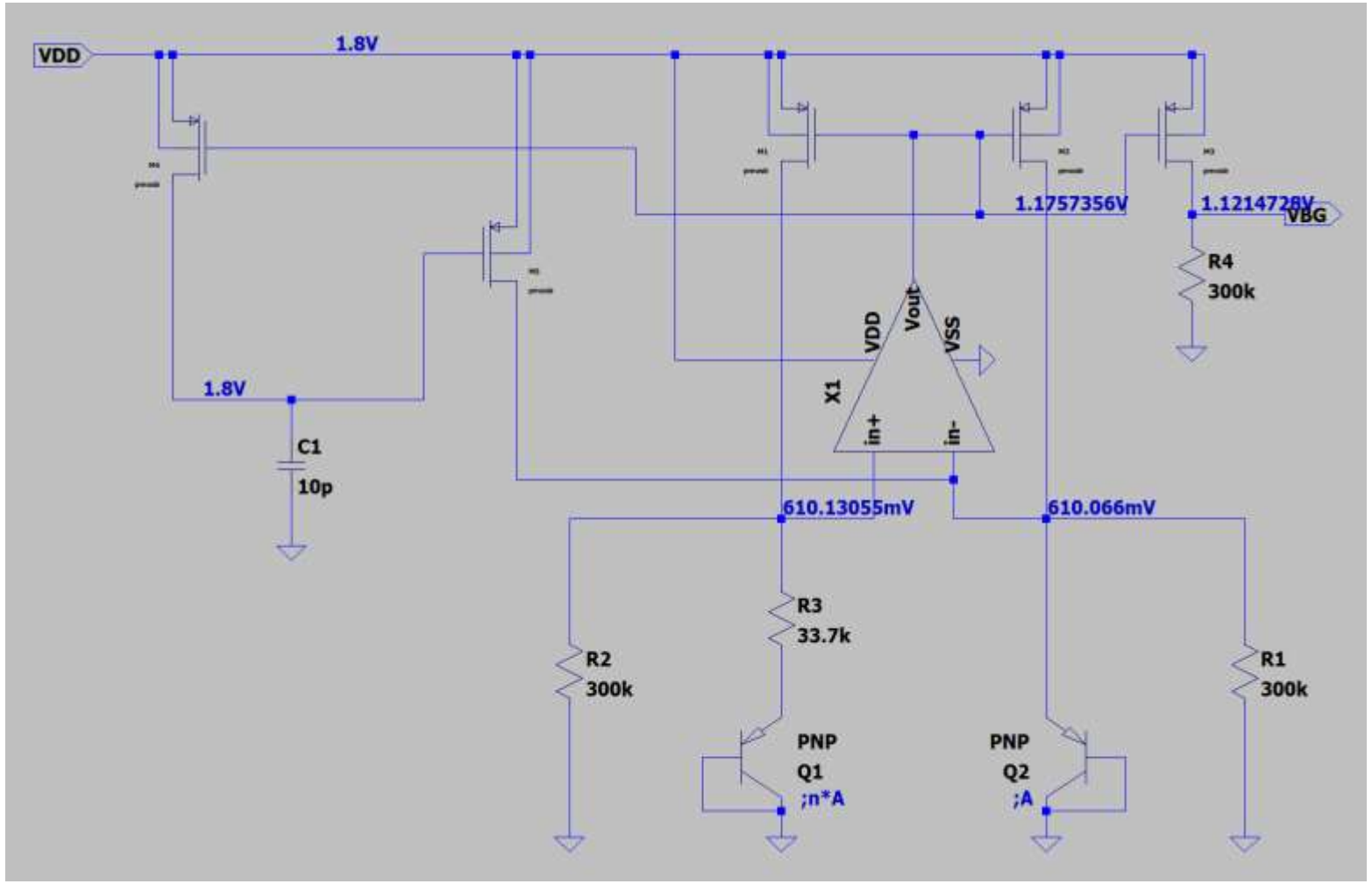

Figure 13. Banba bandgap with DCOP + start-up circuit

Start-up circuit principle

Initially, capacitor C1 is discharged ⇒
⇒ M5`s gate is grounded

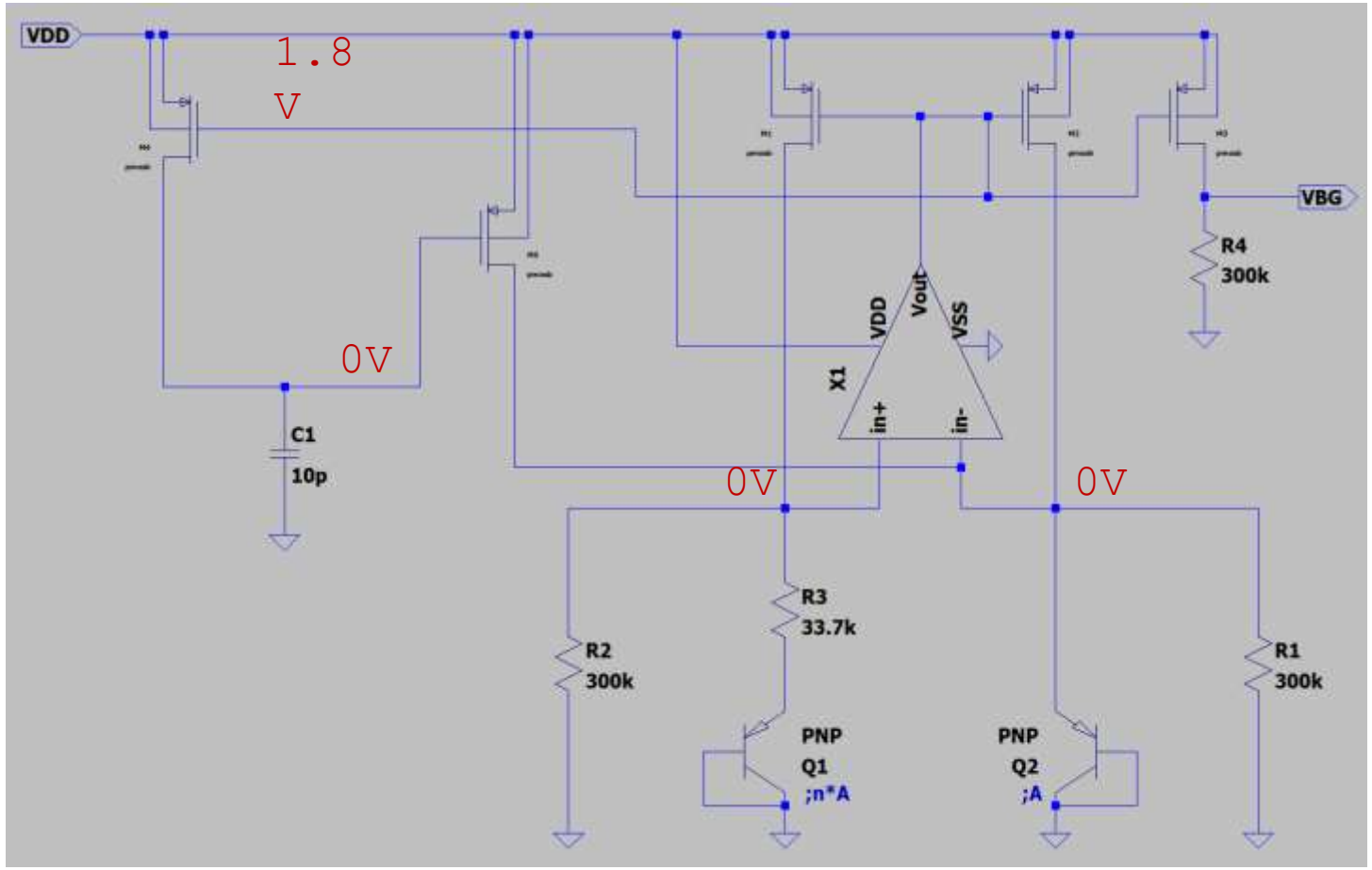

Figure 14. Start-up circuit

Start-up circuit principle

M5`s gate is grounded ⇒ M5 = ON (PMOS) ⇒ current starts flowing through M5

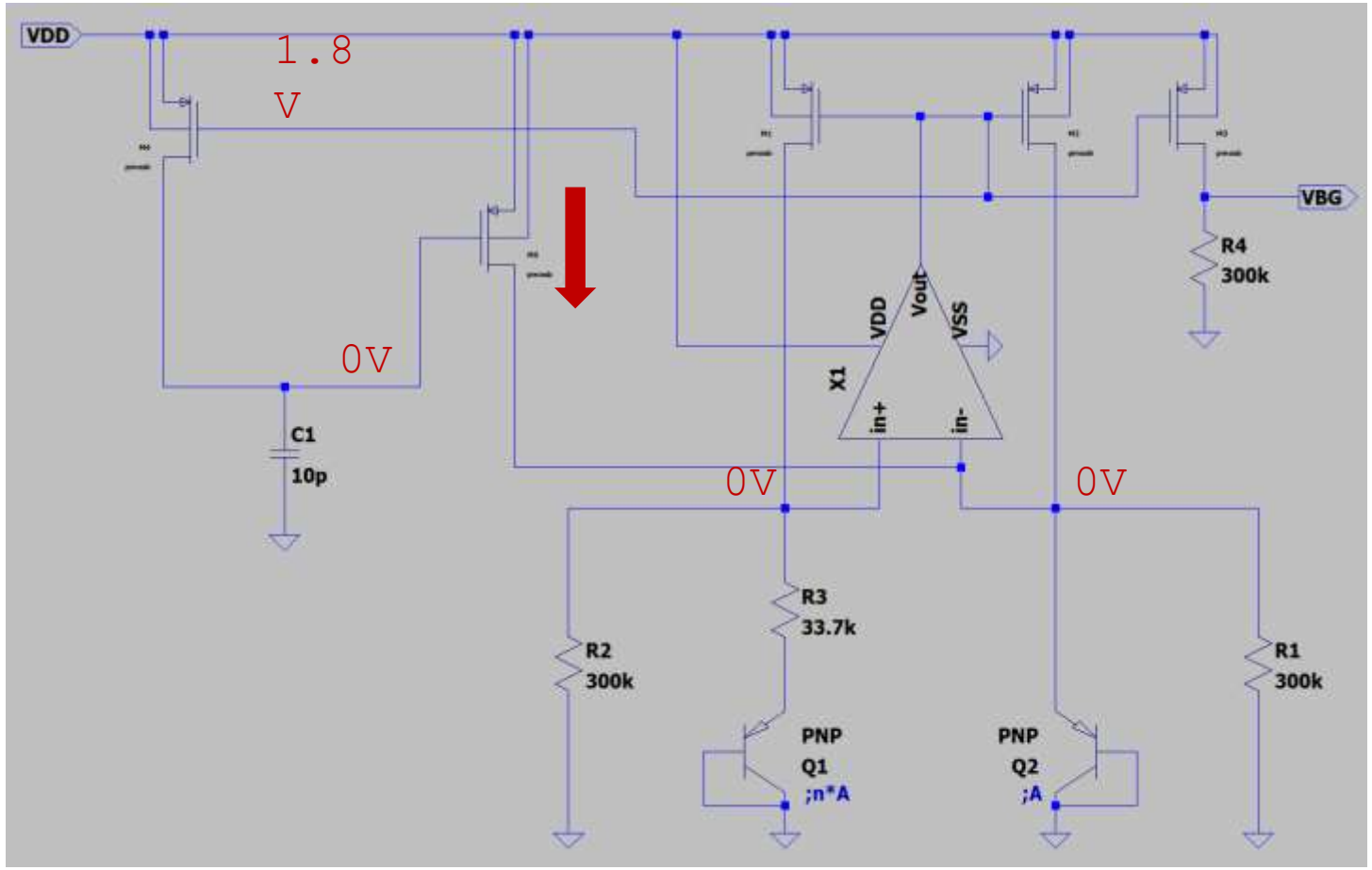

Figure 15. Start-up circuit

Start-up circuit principle

Voltage at v- terminal of the OpAmp increases

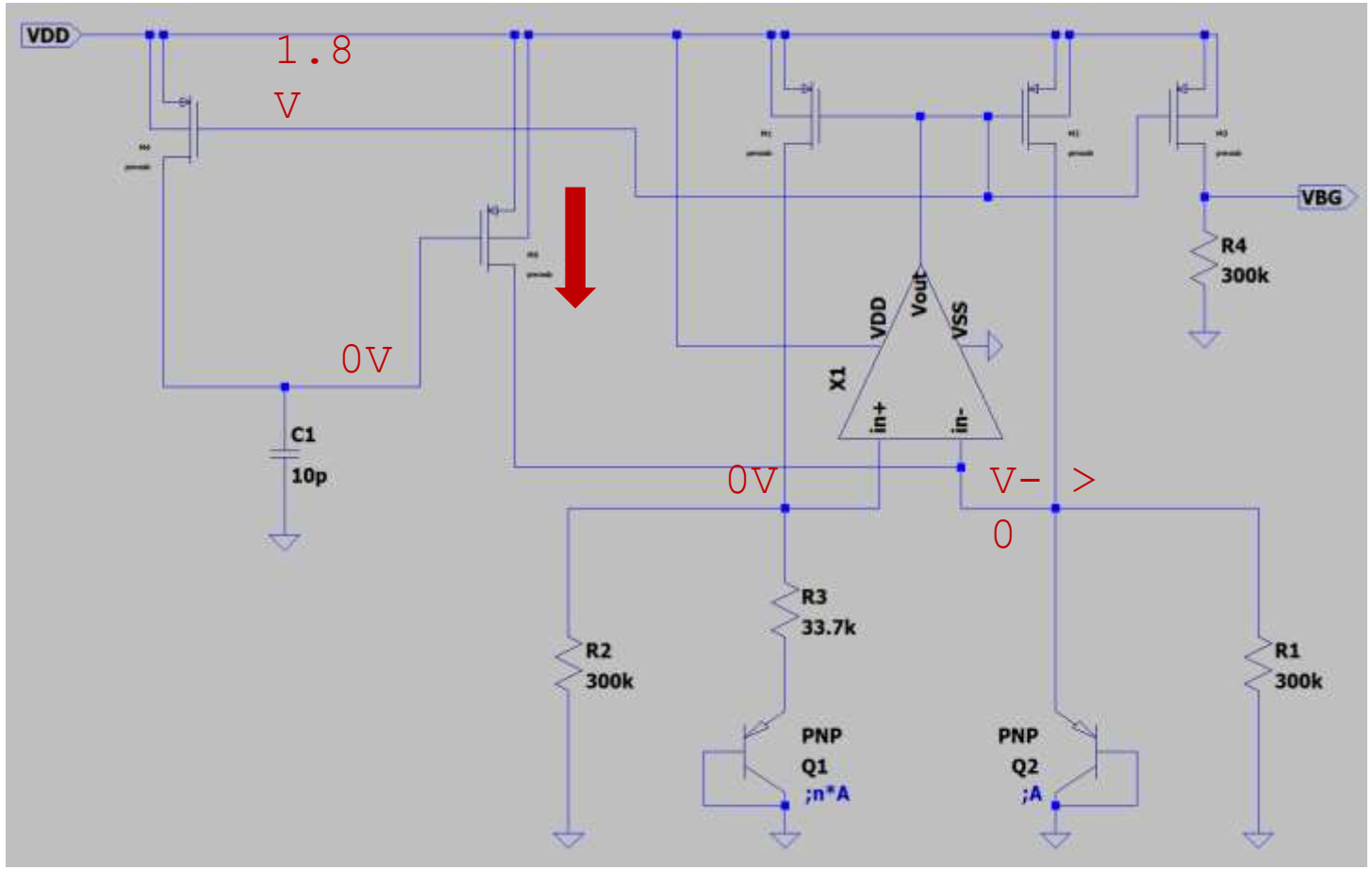

Figure 16. Start-up circuit

Start-up circuit principle

When v- increases, output of OpAmp decreases to ground so that it maintains v+ equal to v- , thus upper PMOS mirrors open

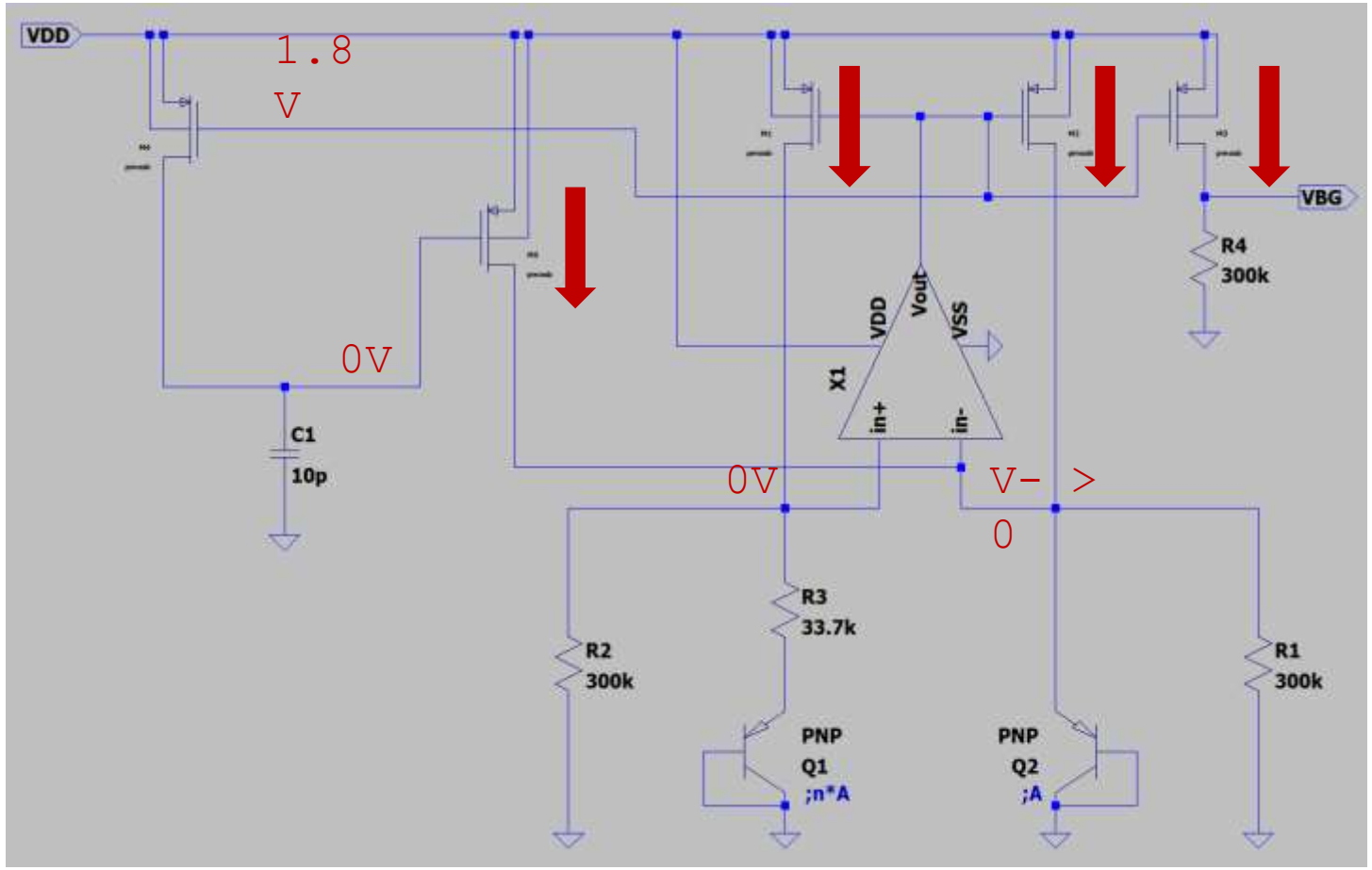

Figure 17. Start-up circuit

Start-up circuit principle

M4 opens when PMOS mirrors open ⇒ C1 charges and closes M5 ⇒ start-up circuit shuts down

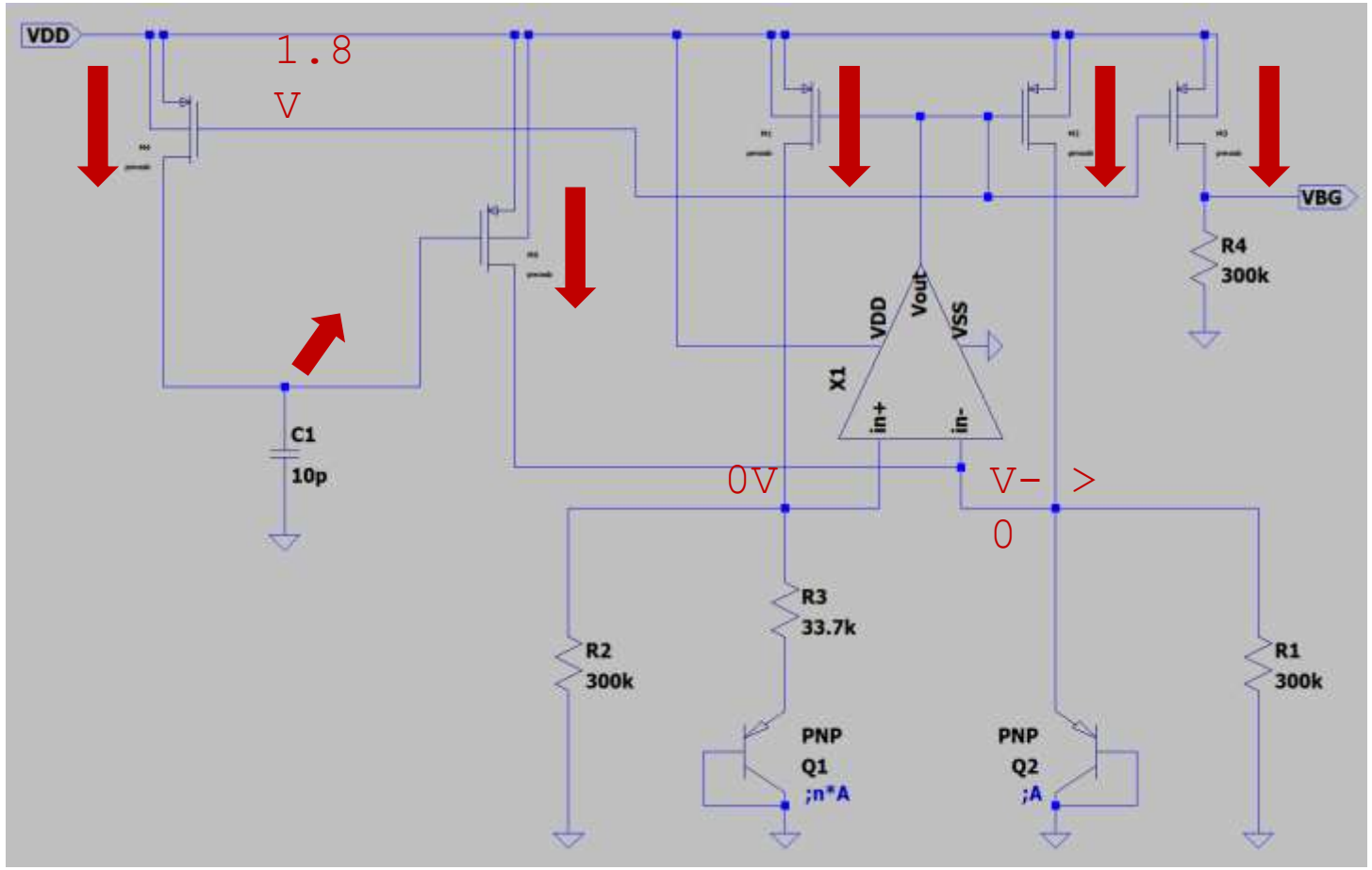

Figure 18. Start-up circuit

Stability simulation

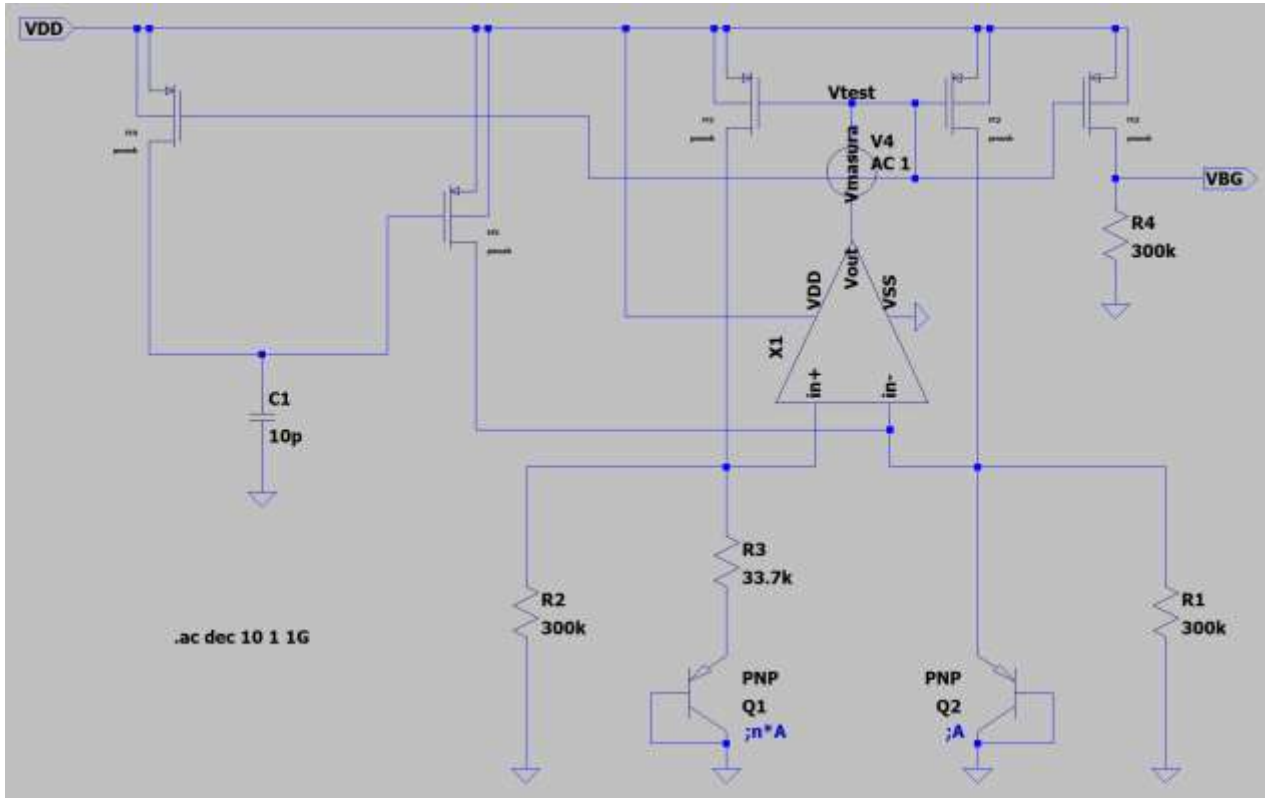

Figure 19. Banba bandgap

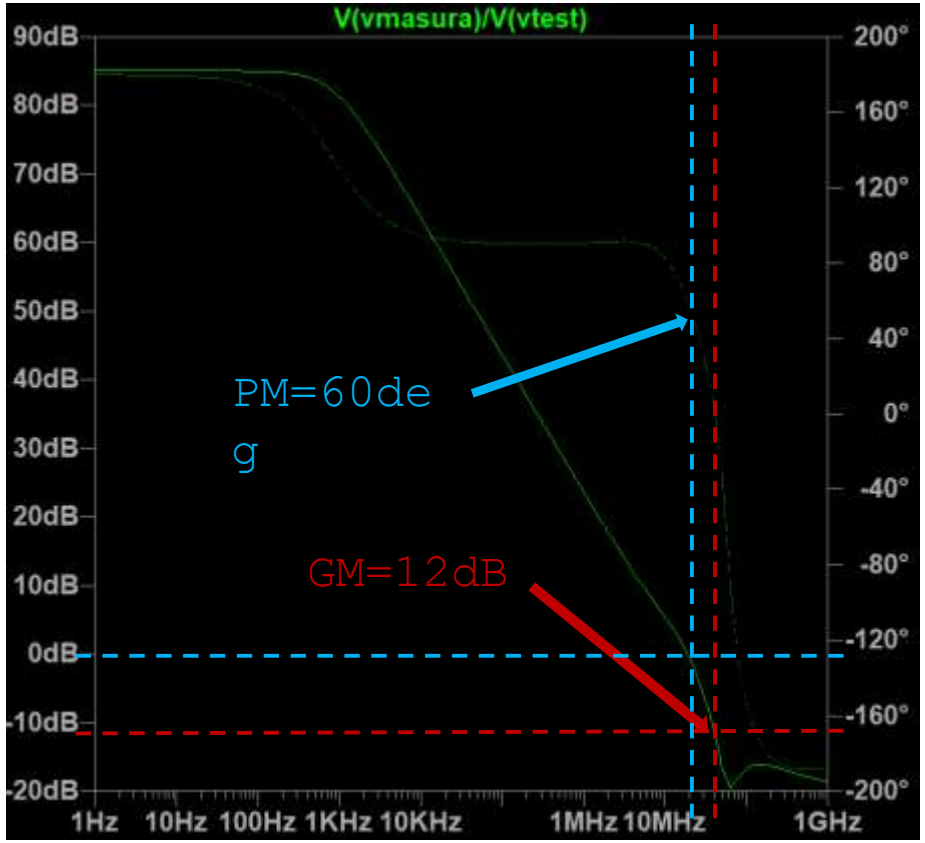

Figure 20. Stability simulation for bandgap

Temperature sweep

$\Delta V_{BG} = 1.1222V - 1.1213V \cong 0.9mV$ across the given temperature domain

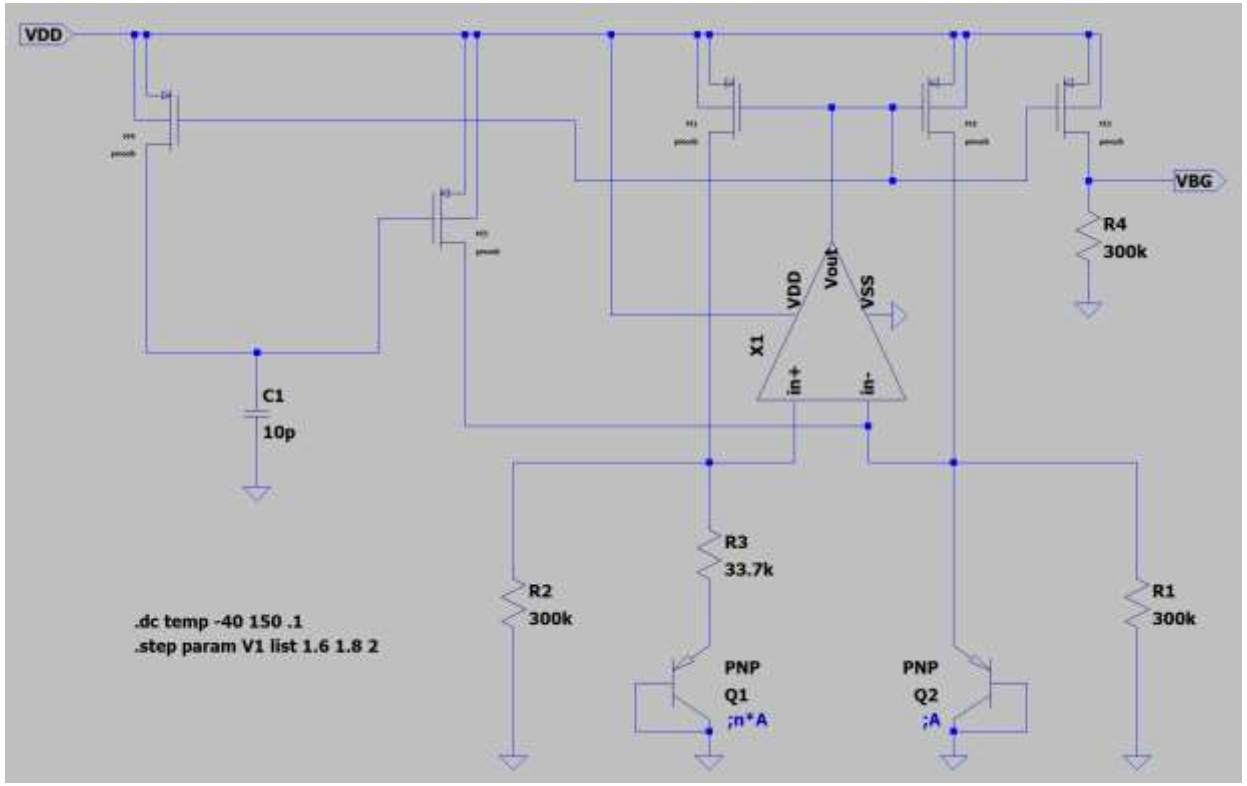

Figure 21. Banba bandgap

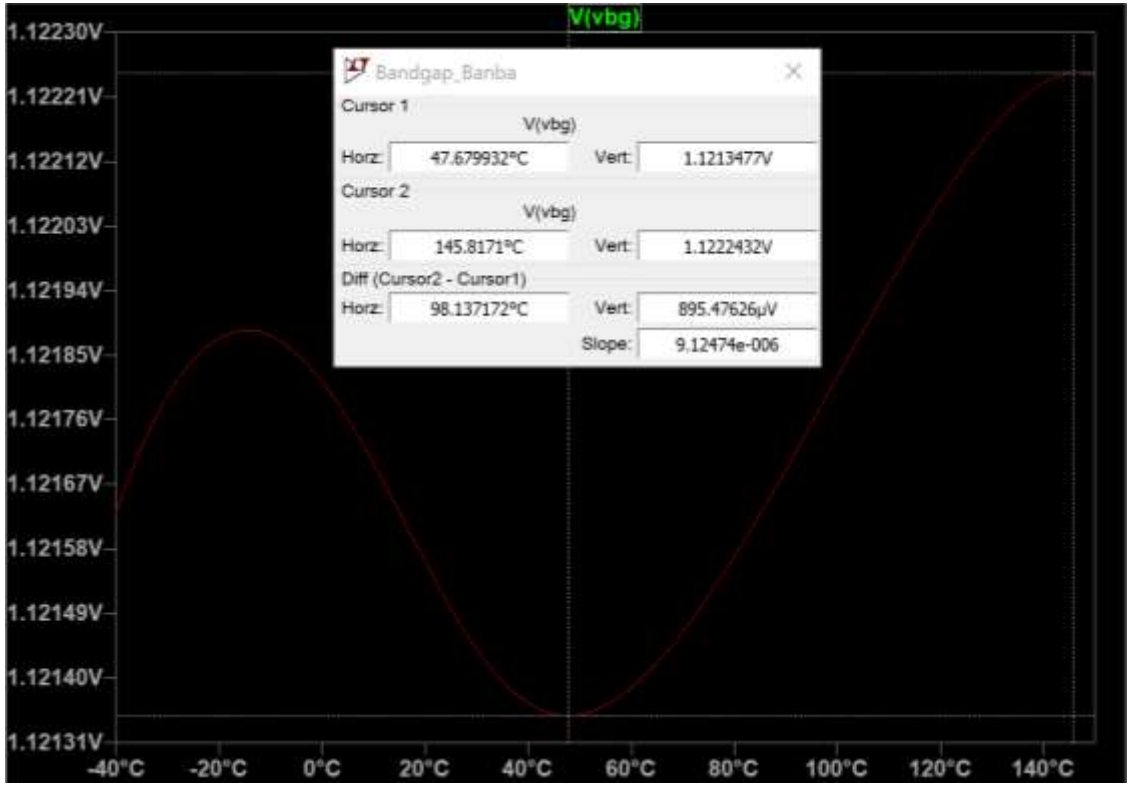

Figure 22. V_{BG} vs temperature

Temperature sweep – Quiescent current variation across temp.

$\Delta \mathrm{Iquiescent} = 26.26\mu\mathrm{A} - 21.55\mu\mathrm{A} \cong 4.7\mu\mathrm{A}$ across the given temperature domain

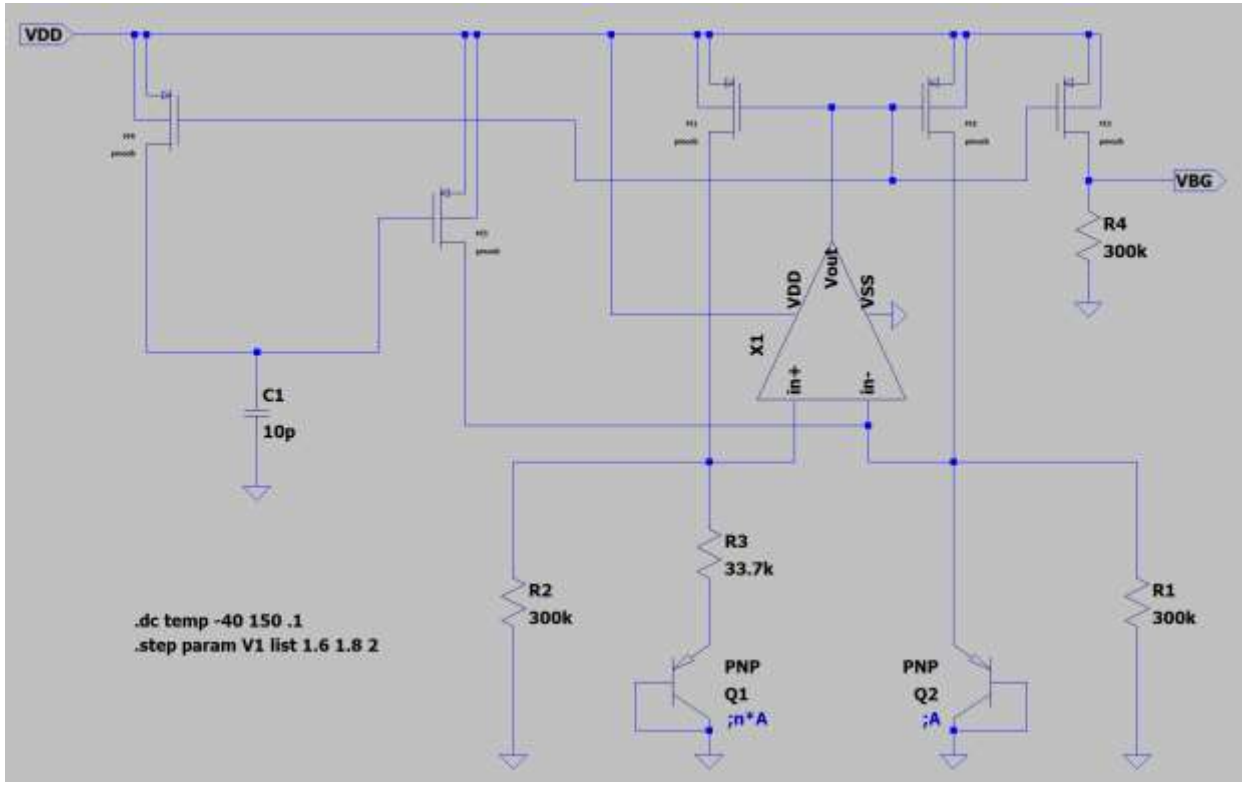

Figure 23. Banba bandgap

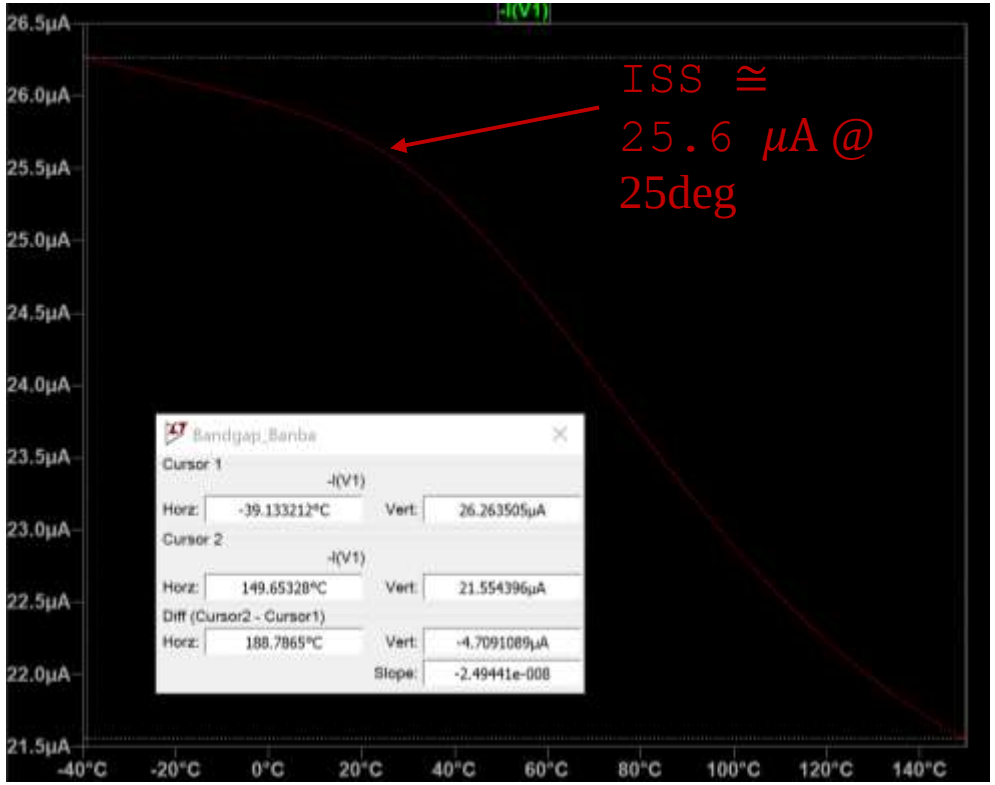

Figure 24. Quiescent current vs temperature

VDD variation

$\Delta V_{BG} = 1.1217V - 1.1207V \cong 1mV$ across the given VDD domain

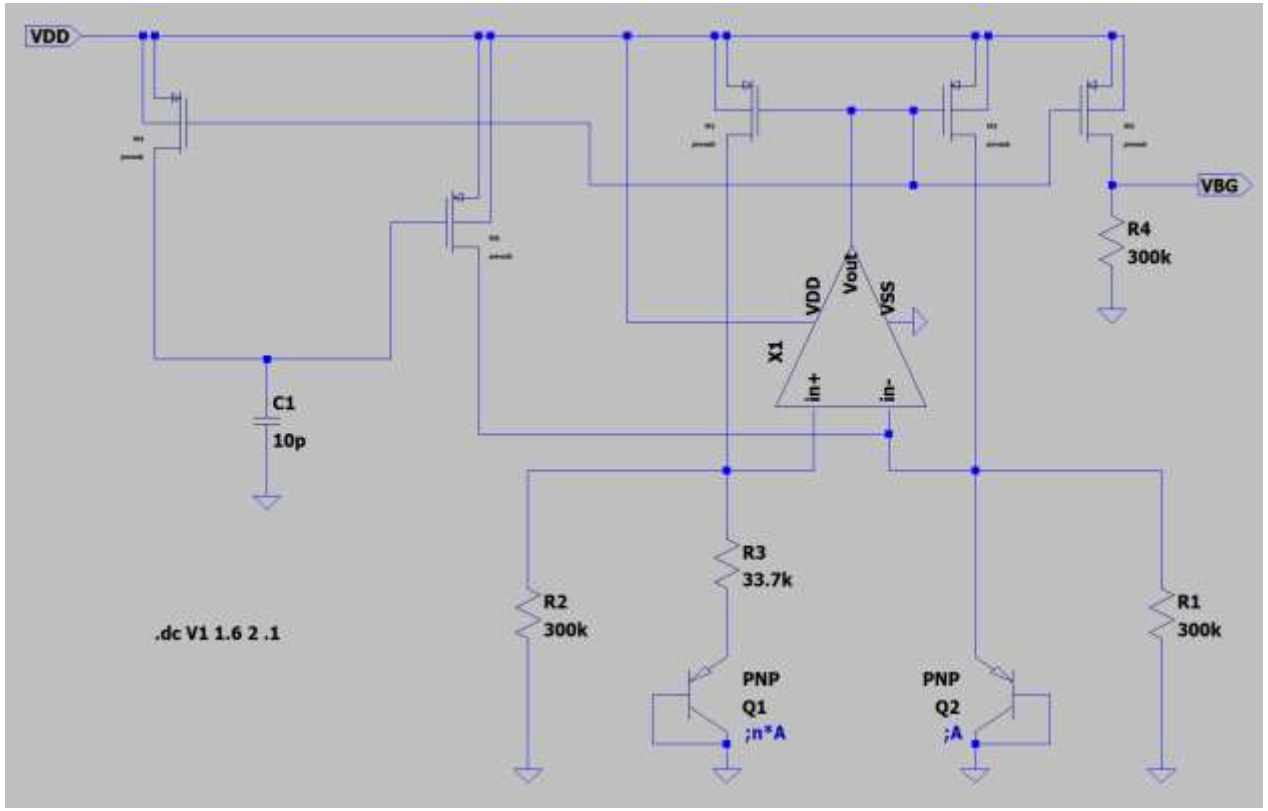

Figure 25. Banba bandgap

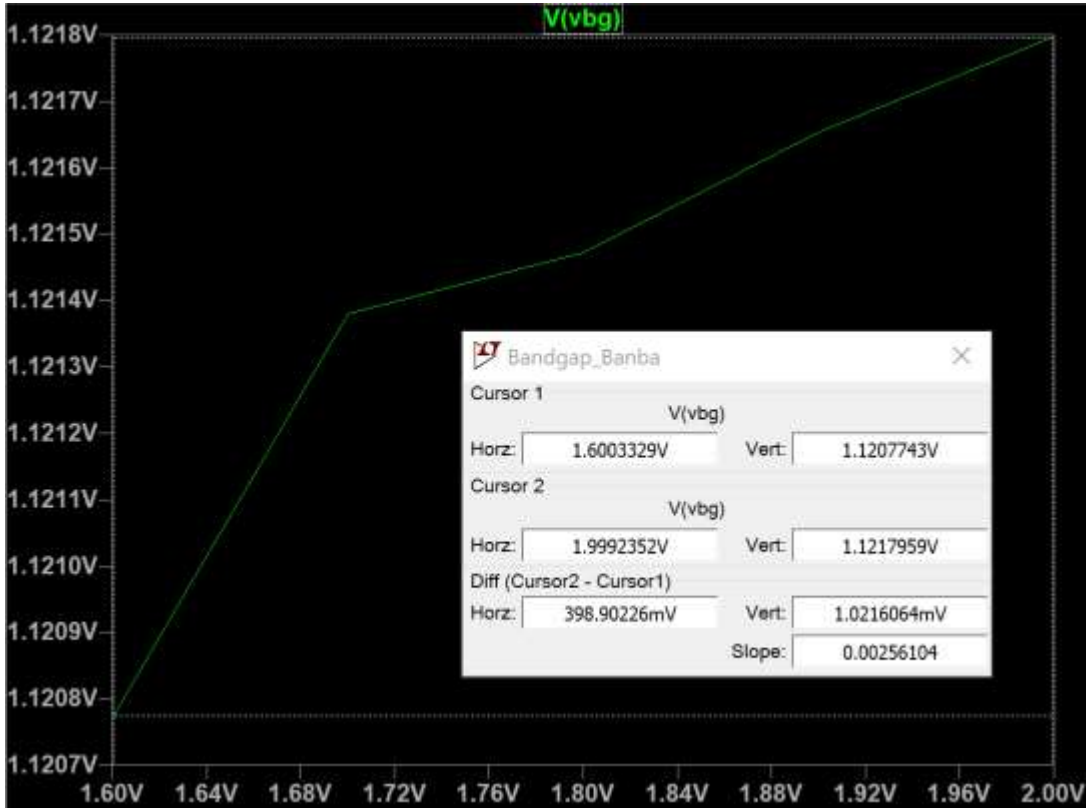

Figure 26. V_{BG} vs VDD variation

VDD variation - Quiescent current variation across VDD domain

$\Delta \mathrm{Iquiescent} = 25.67\mu\mathrm{A} - 25.45\mu\mathrm{A} \cong 230\mathrm{nA}$ across the given VDD domain

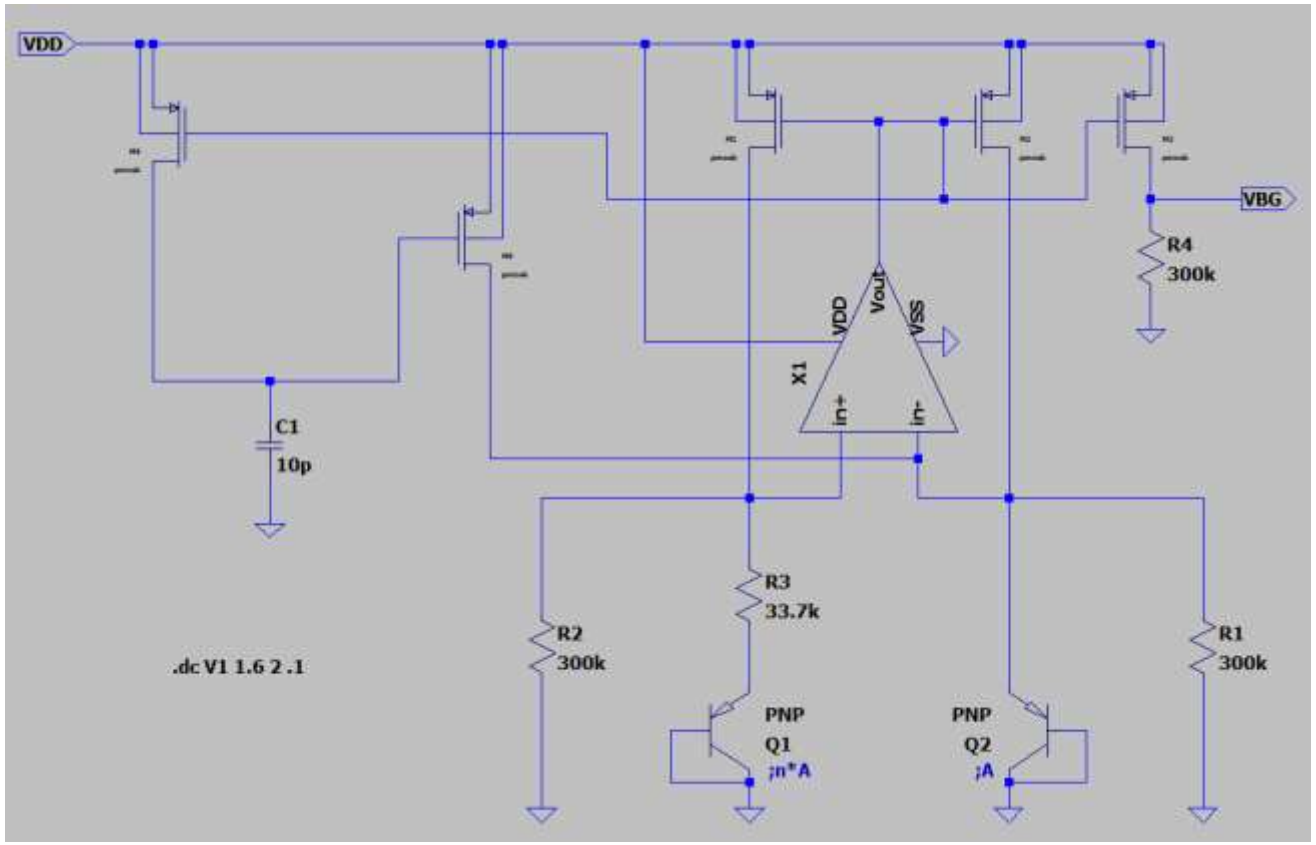

Figure 27. Banba bandgap

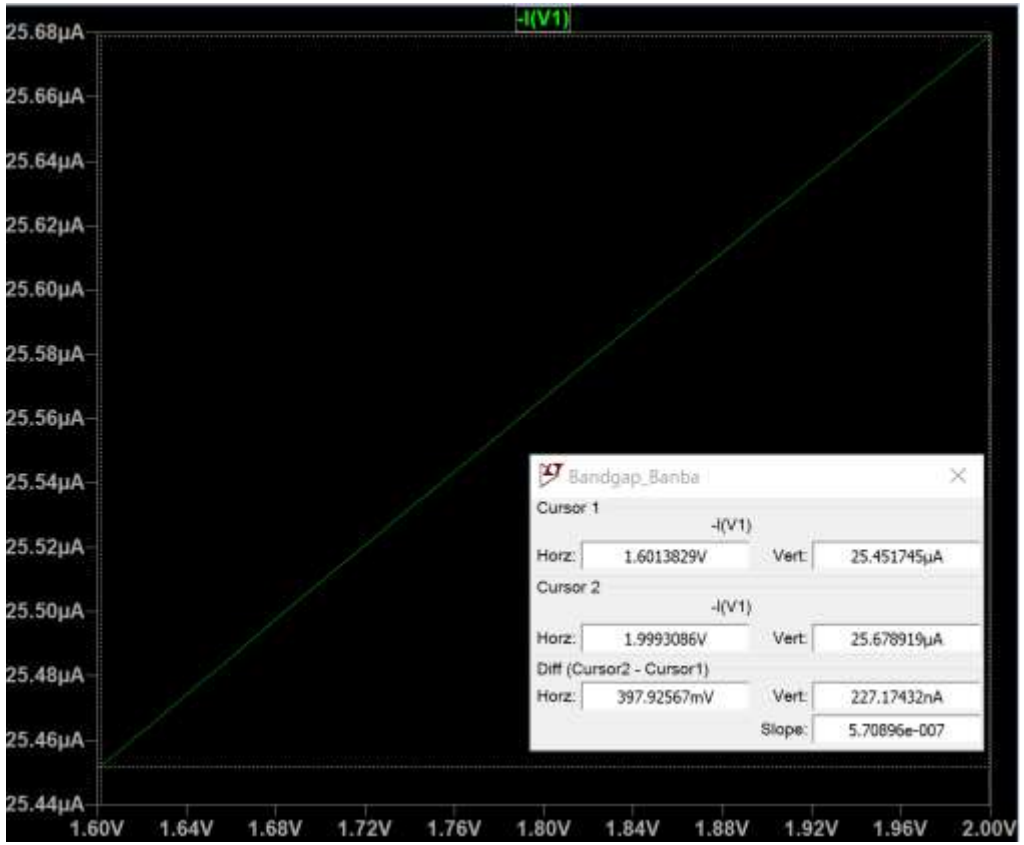

Figure 28. Quiescent current vs VDD

Monte Carlo (process variation)

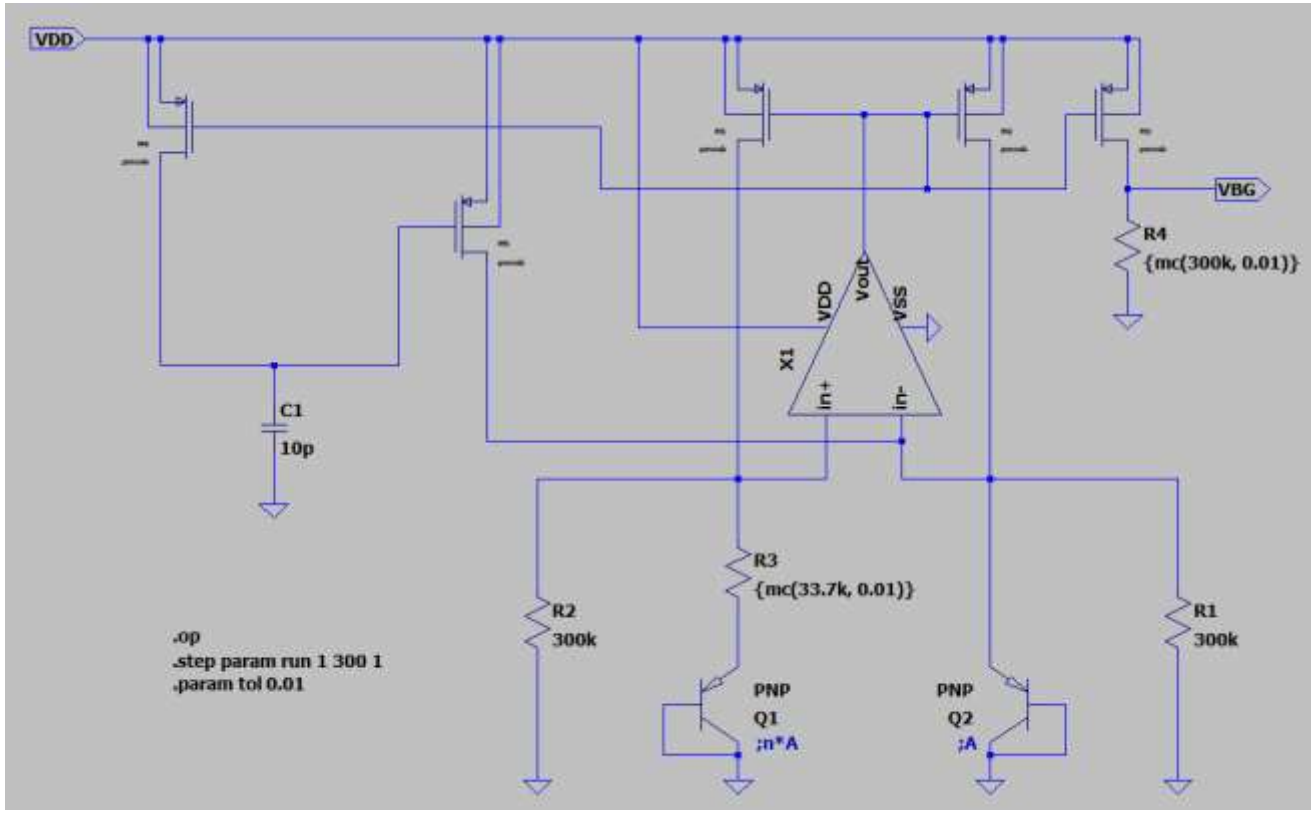

Figure 29. Banba bandgap

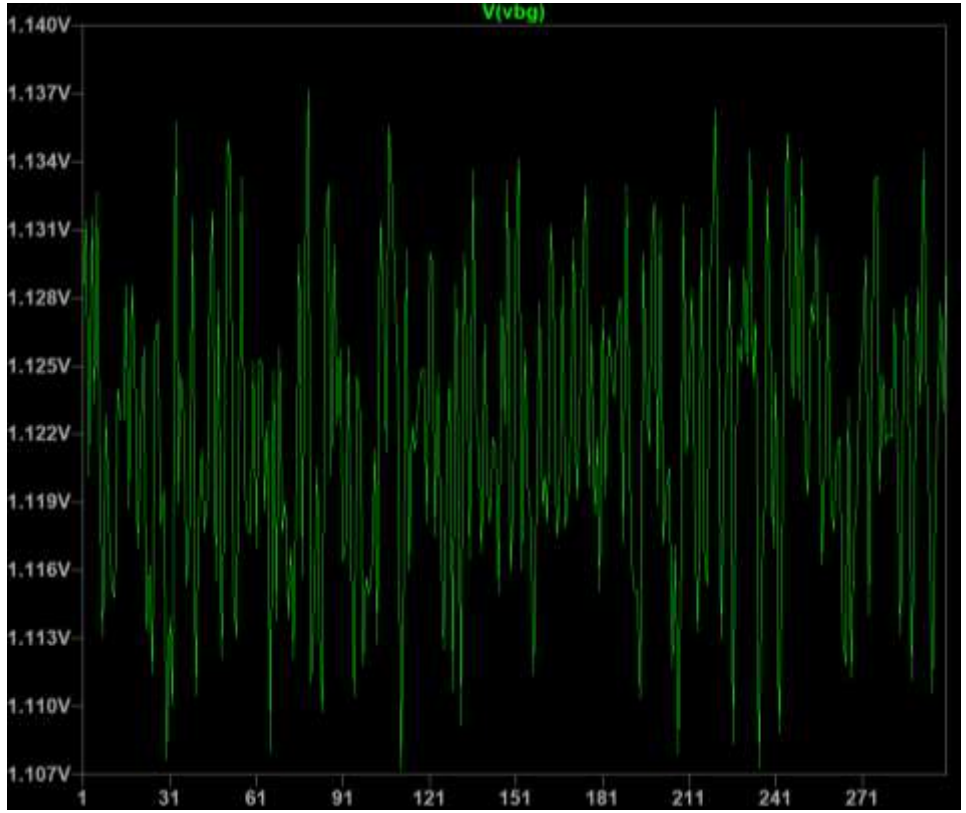

Figure 30. V_{BG} vs R3 and R4`s tolerance

Monte Carlo (process variation)

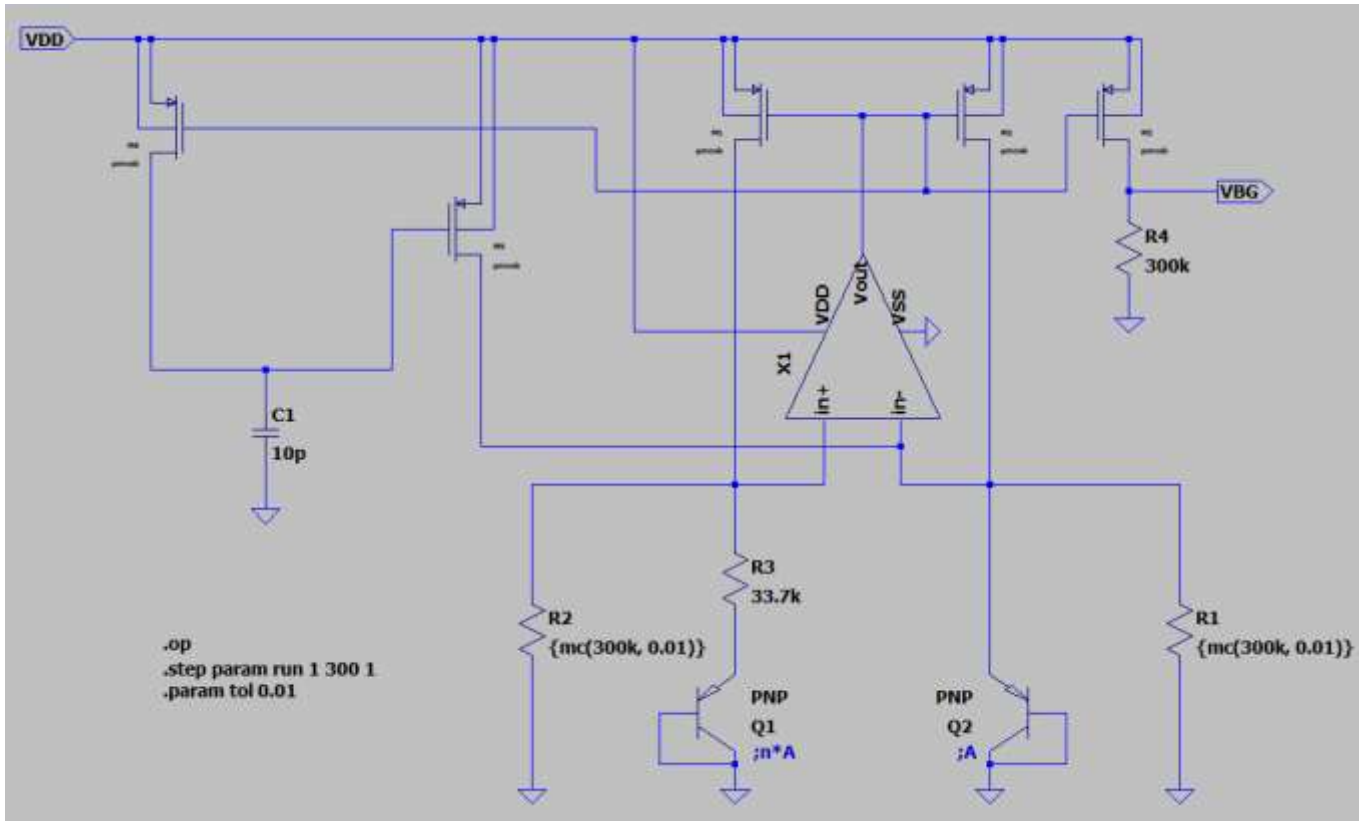

Figure 31. Banba bandgap

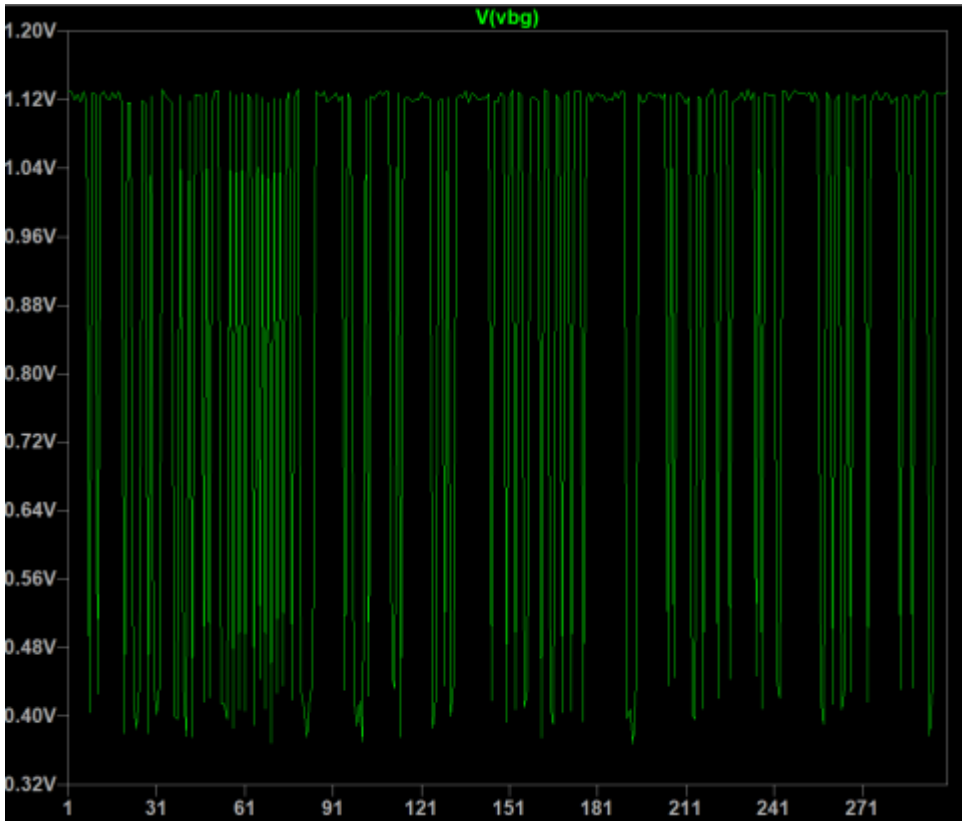

Figure 32. V_{BG} vs R1 and R2`s tolerance

Monte Carlo (process variation)

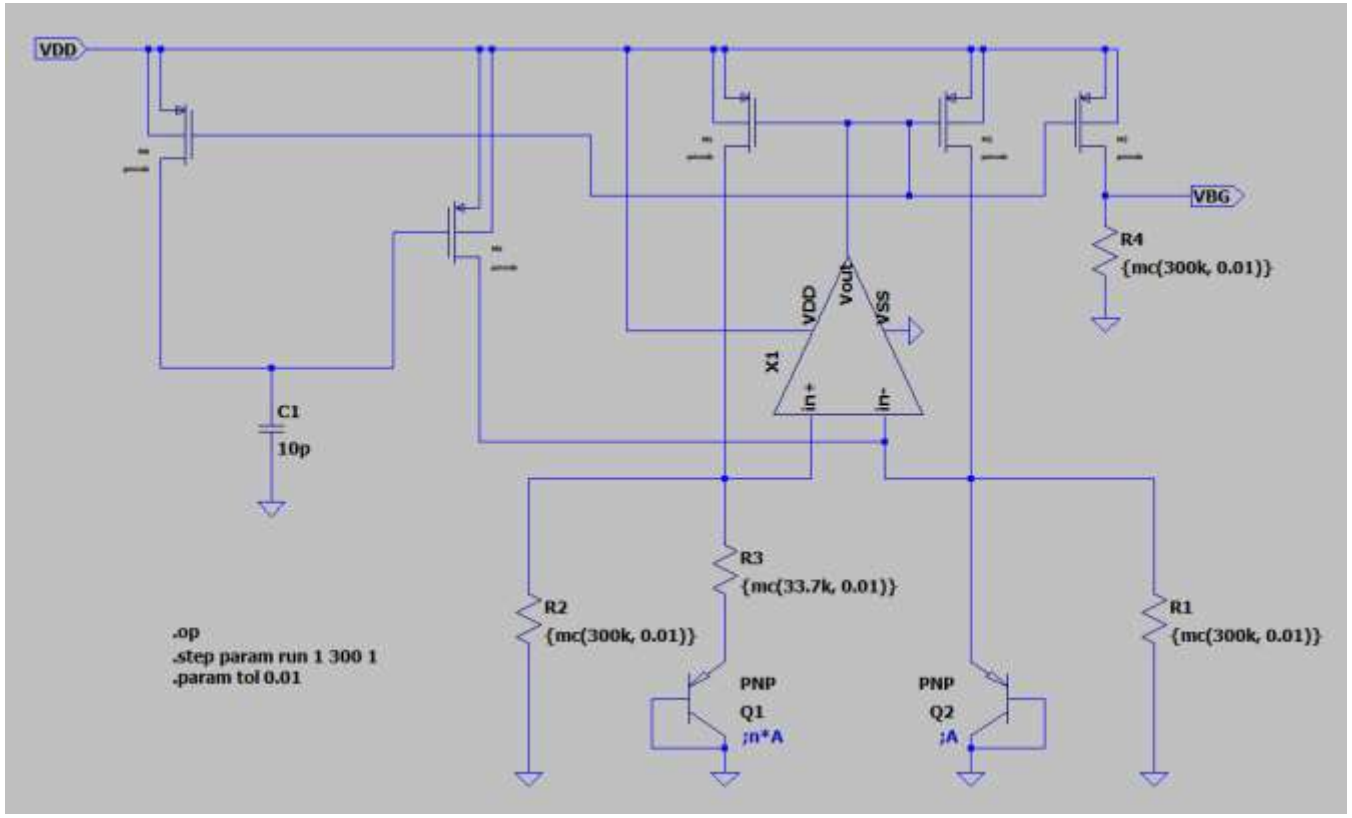

Figure 33. Banba bandgap

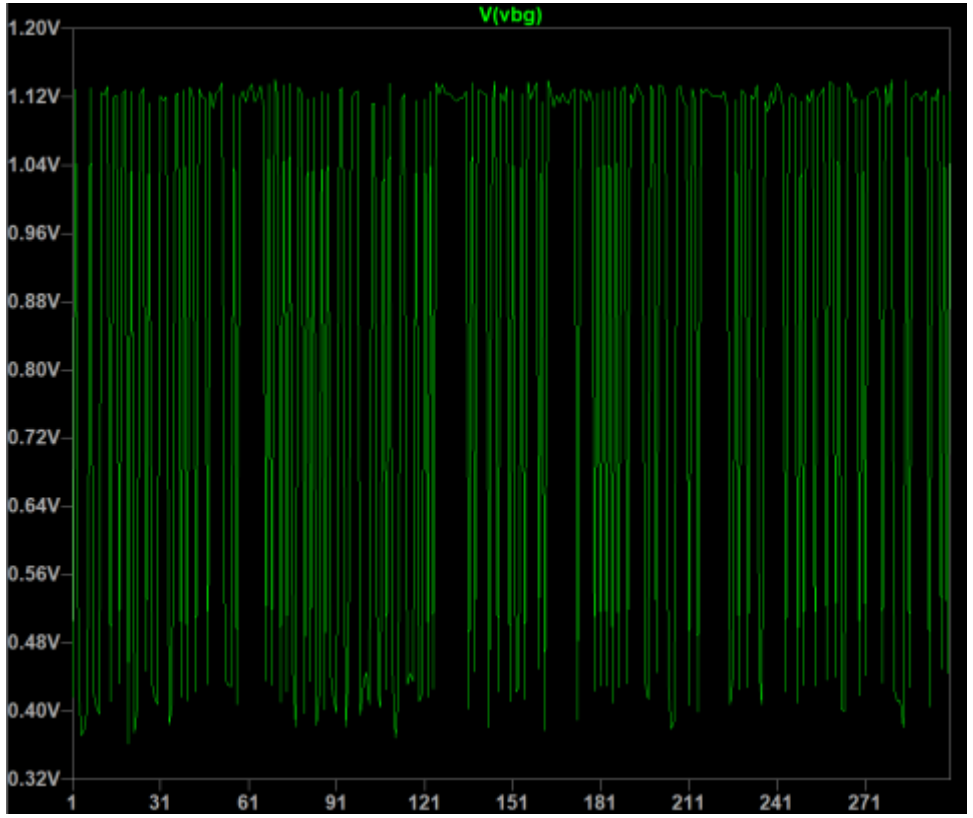

Figure 34. V_{BG} vs all resistor`s tolerance

Monte Carlo (process variation) – V_{BG} histogram

μ V_{BG} =0.45V, δ V_{BG} =720mV

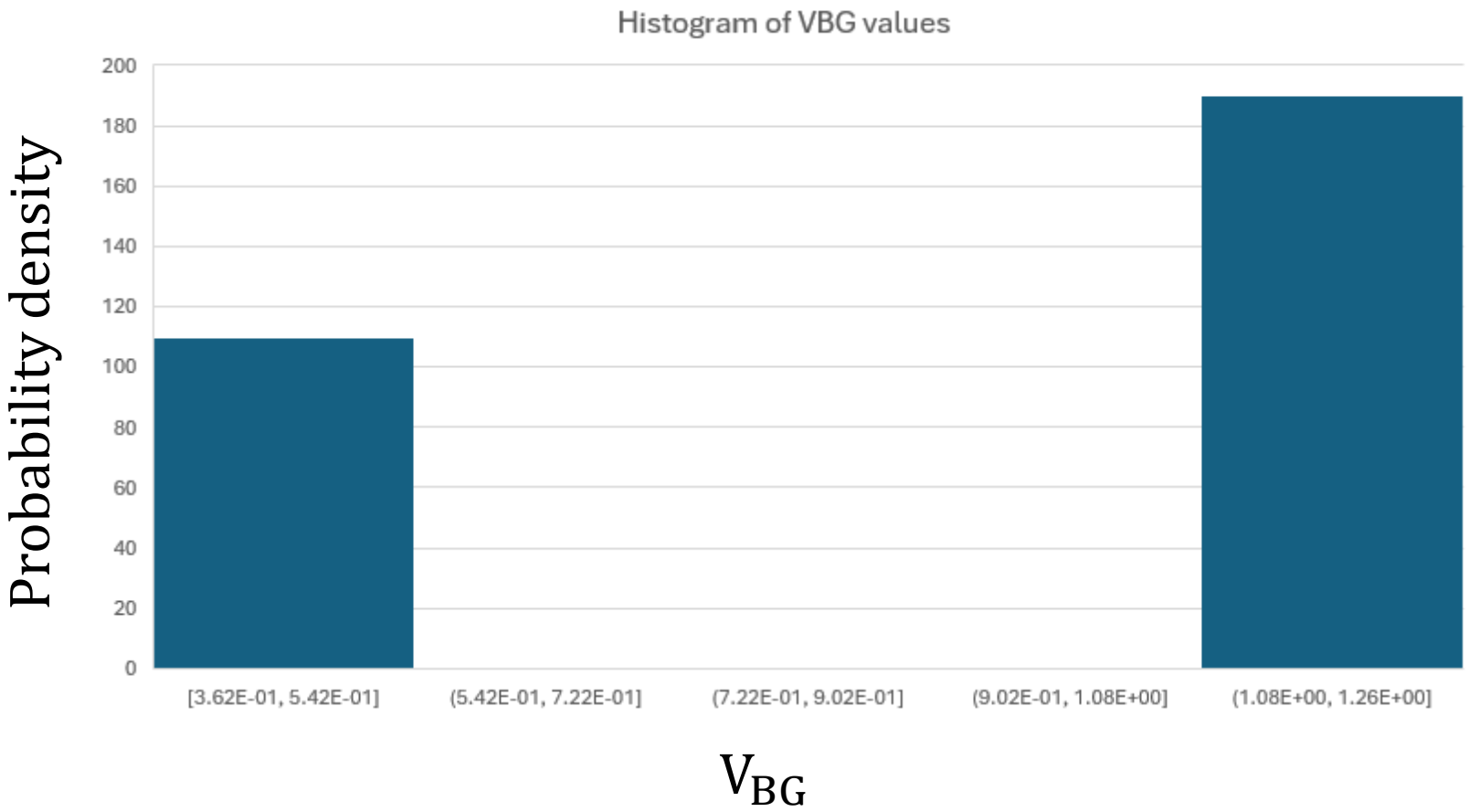

Figure 35. Histogram for V_{BG} values

Monte Carlo (process variation) – Quiescent current vs process

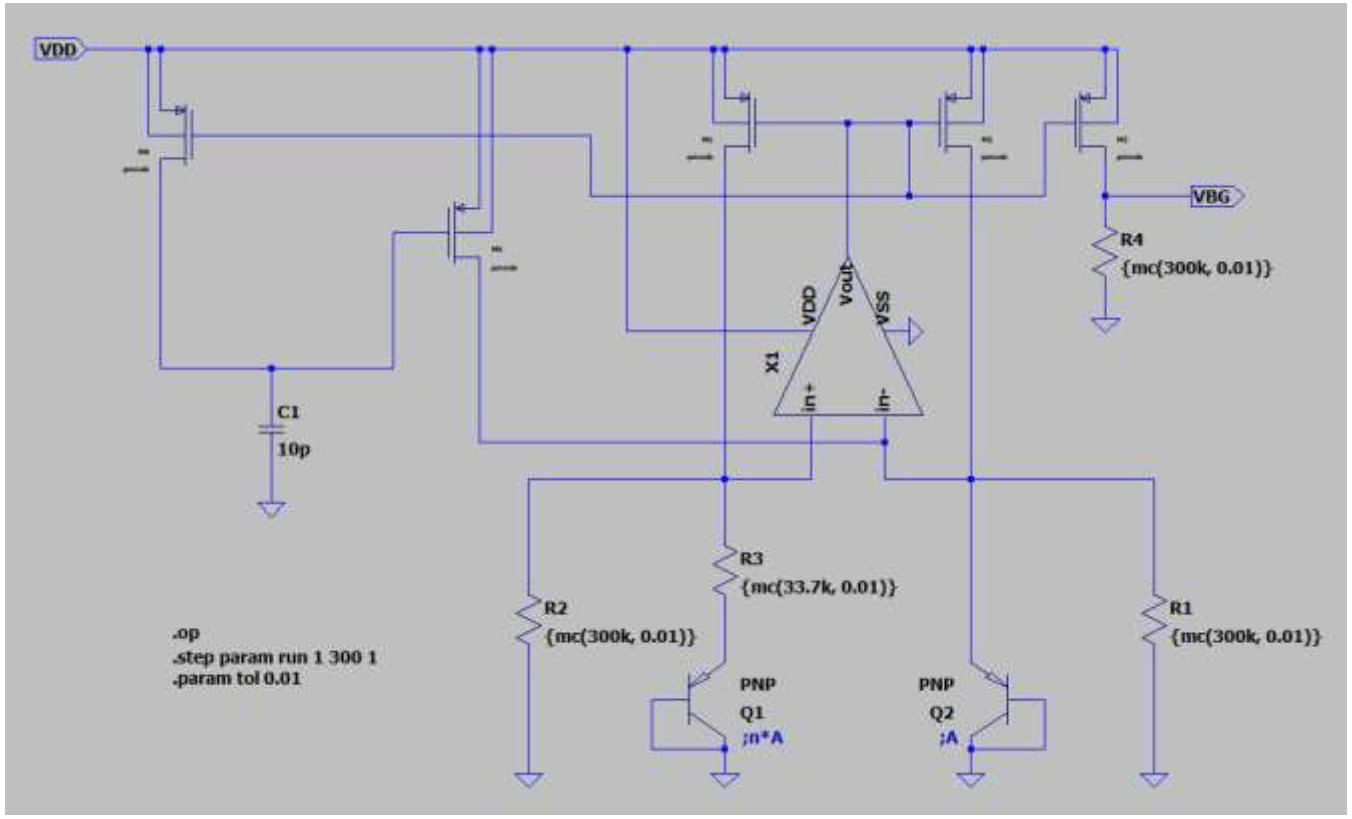

Figure 36. Banba bandgap

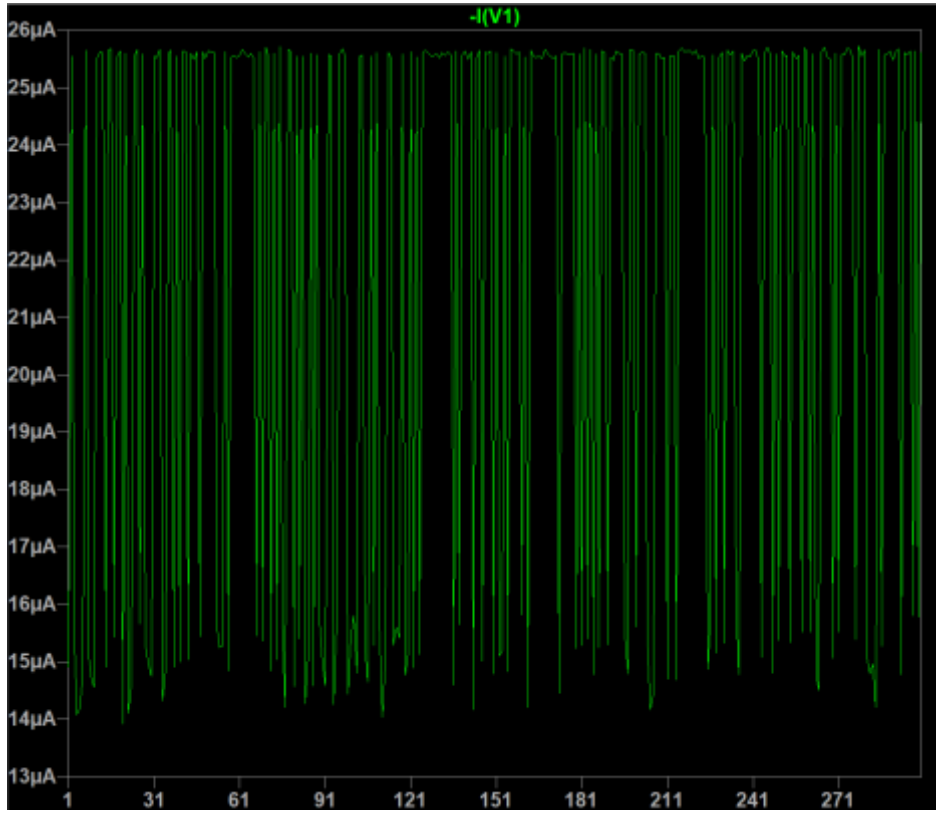

Figure 37. Quiescent current vs process

Monte Carlo (process variation) – Quiescent current histogram

$\Delta \mathrm{Iquiescent} = 25.6\mu\mathrm{A} - 14\mu\mathrm{A} \cong 11.6\mu\mathrm{A}$ vs process

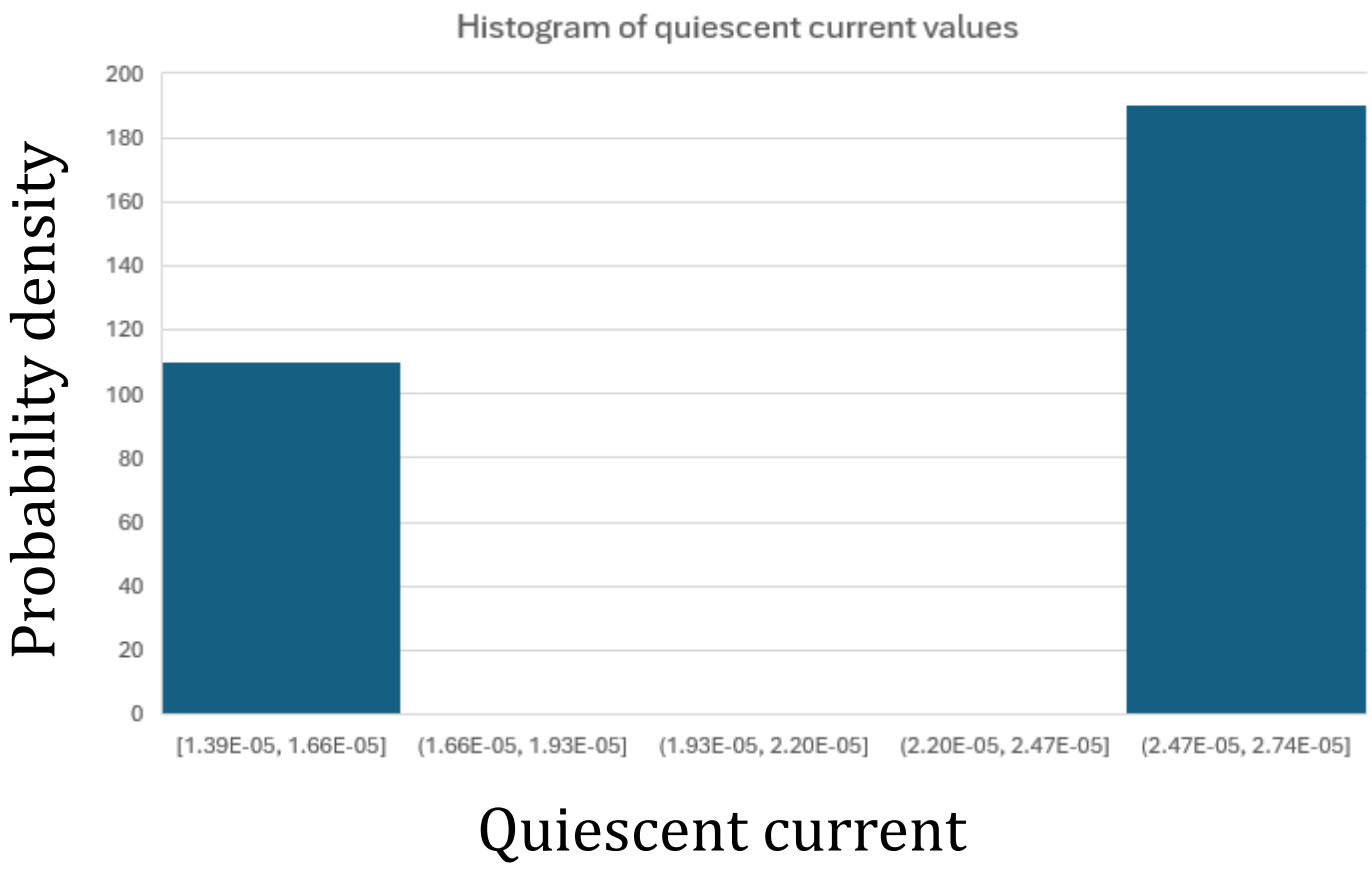

Figure 38. Histogram for quiescent current values

Transient simulation

$t_{start\text{-}up} \cong 50\mu s$

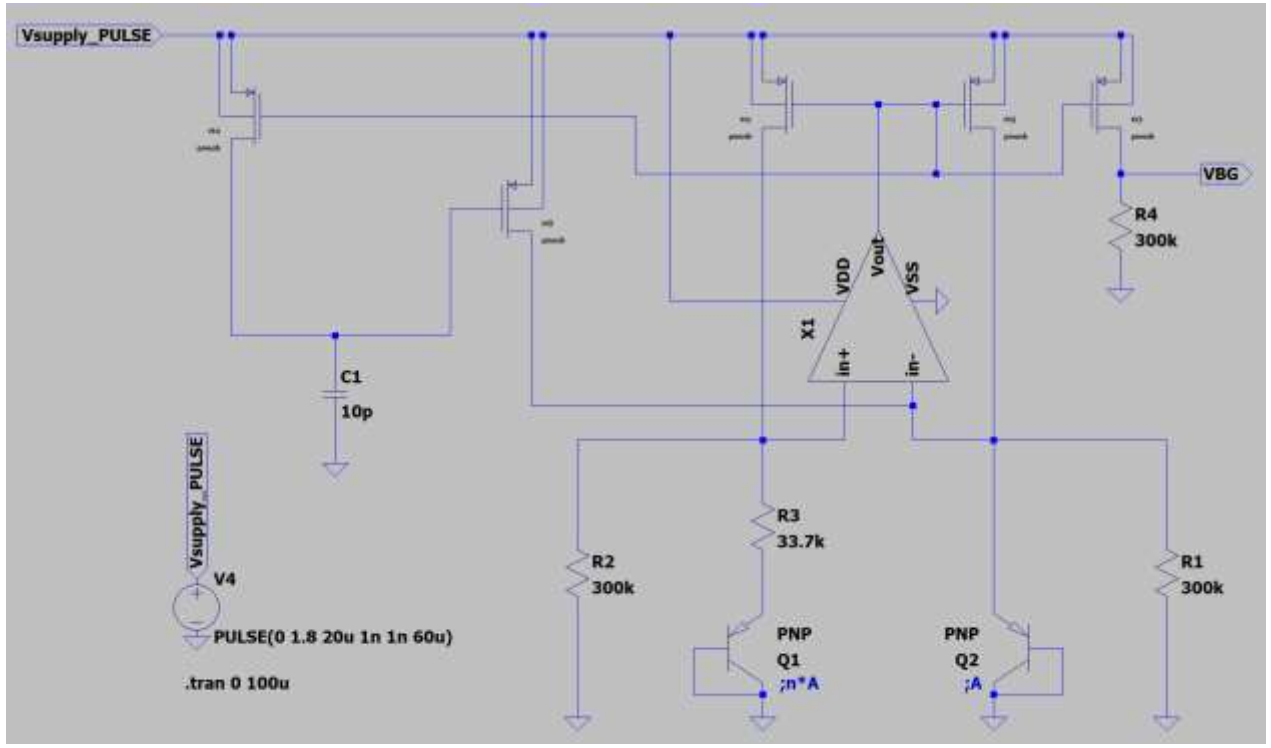

Figure 39. Banba bandgap

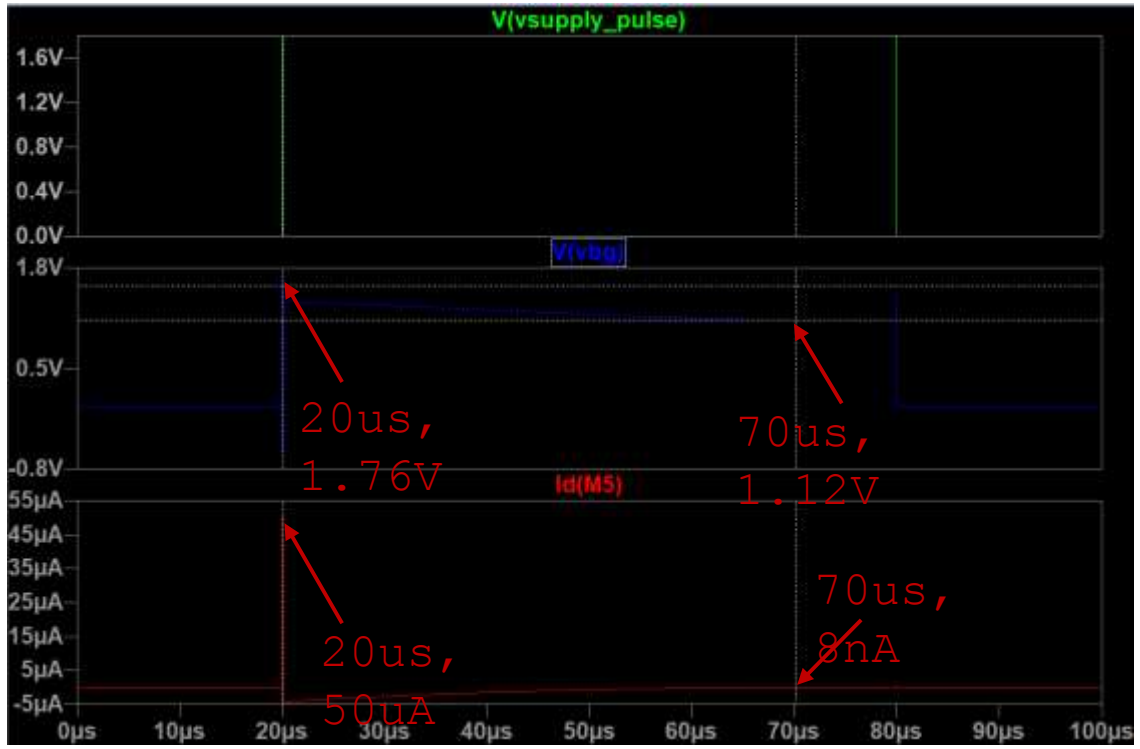

Figure 40. Start-up time

PSRR

PSRR ≅ -54dB @ 100Hz

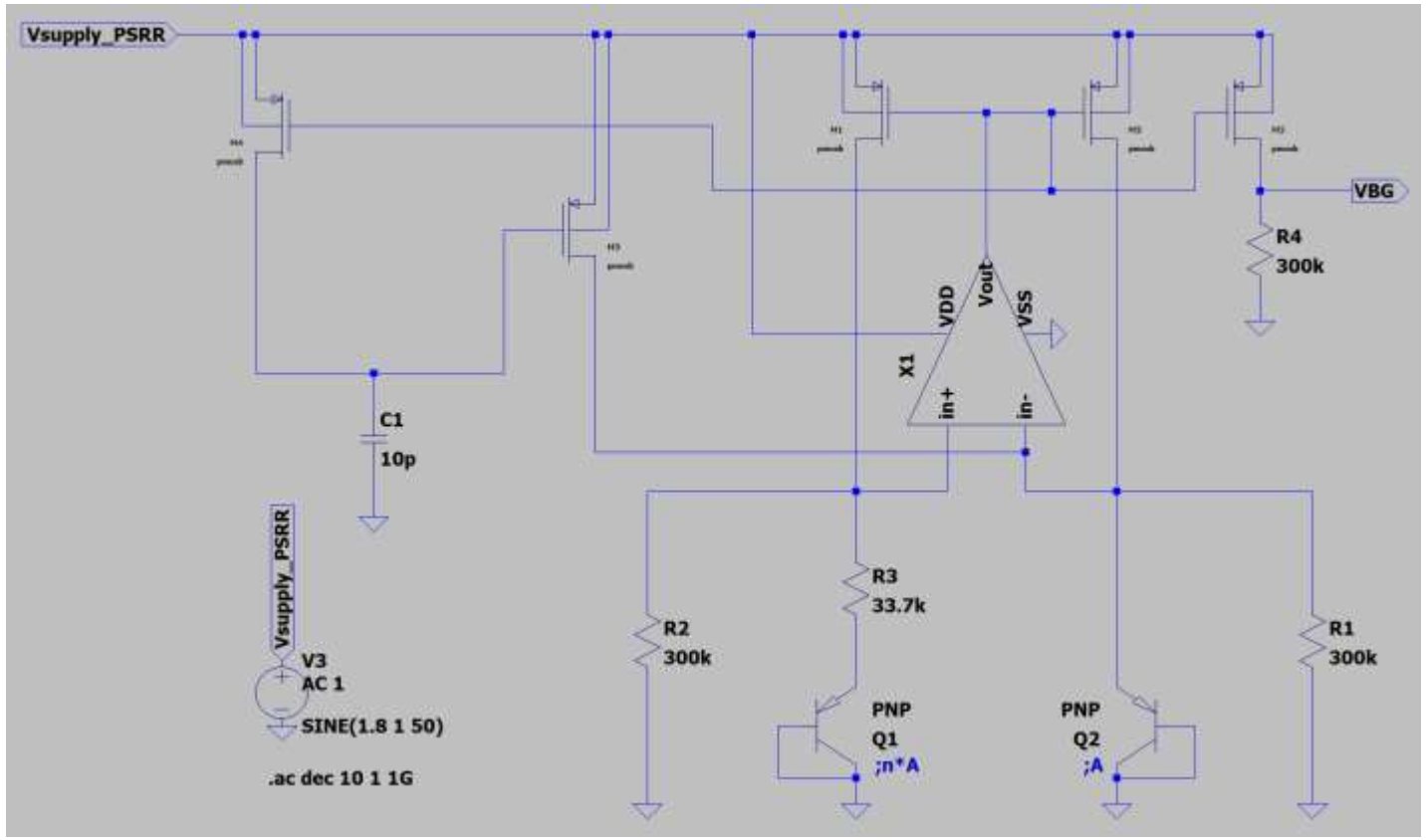

Figure 41. Banba bandgap

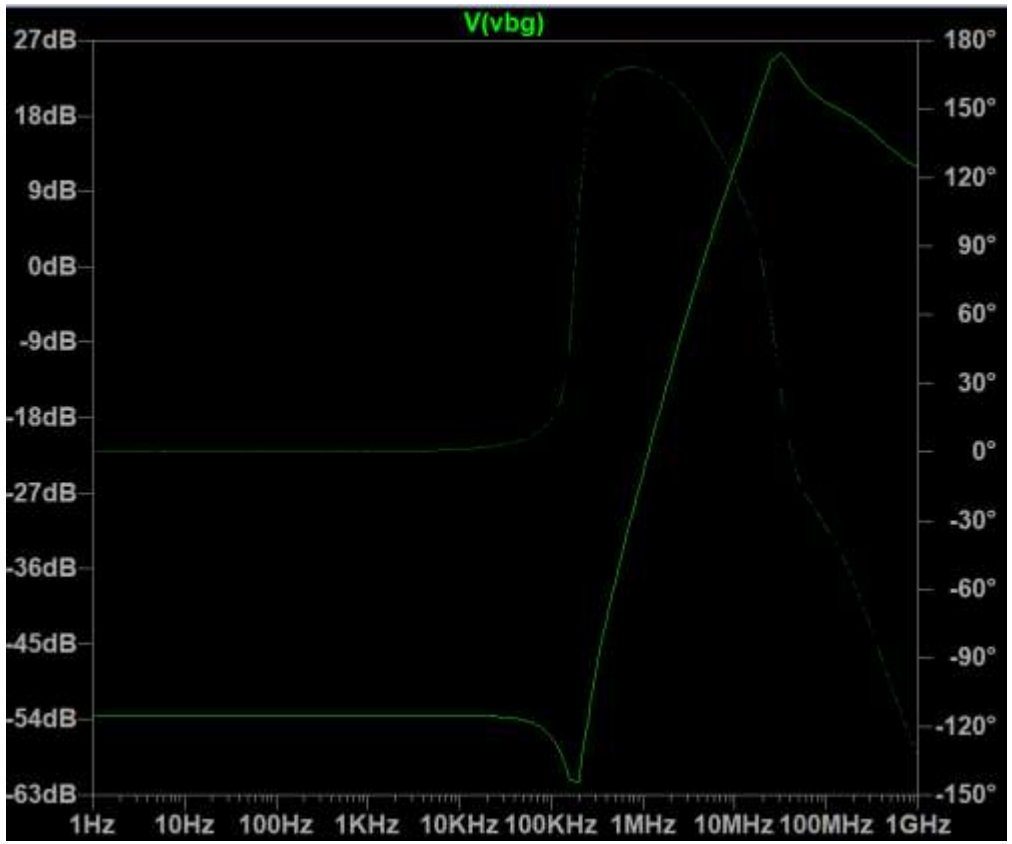

Figure 42. PSRR

2nd order compensation

$\Delta V_{BG} = 1.1194V - 1.1186V \cong 0.8mV$ across the given temperature domain

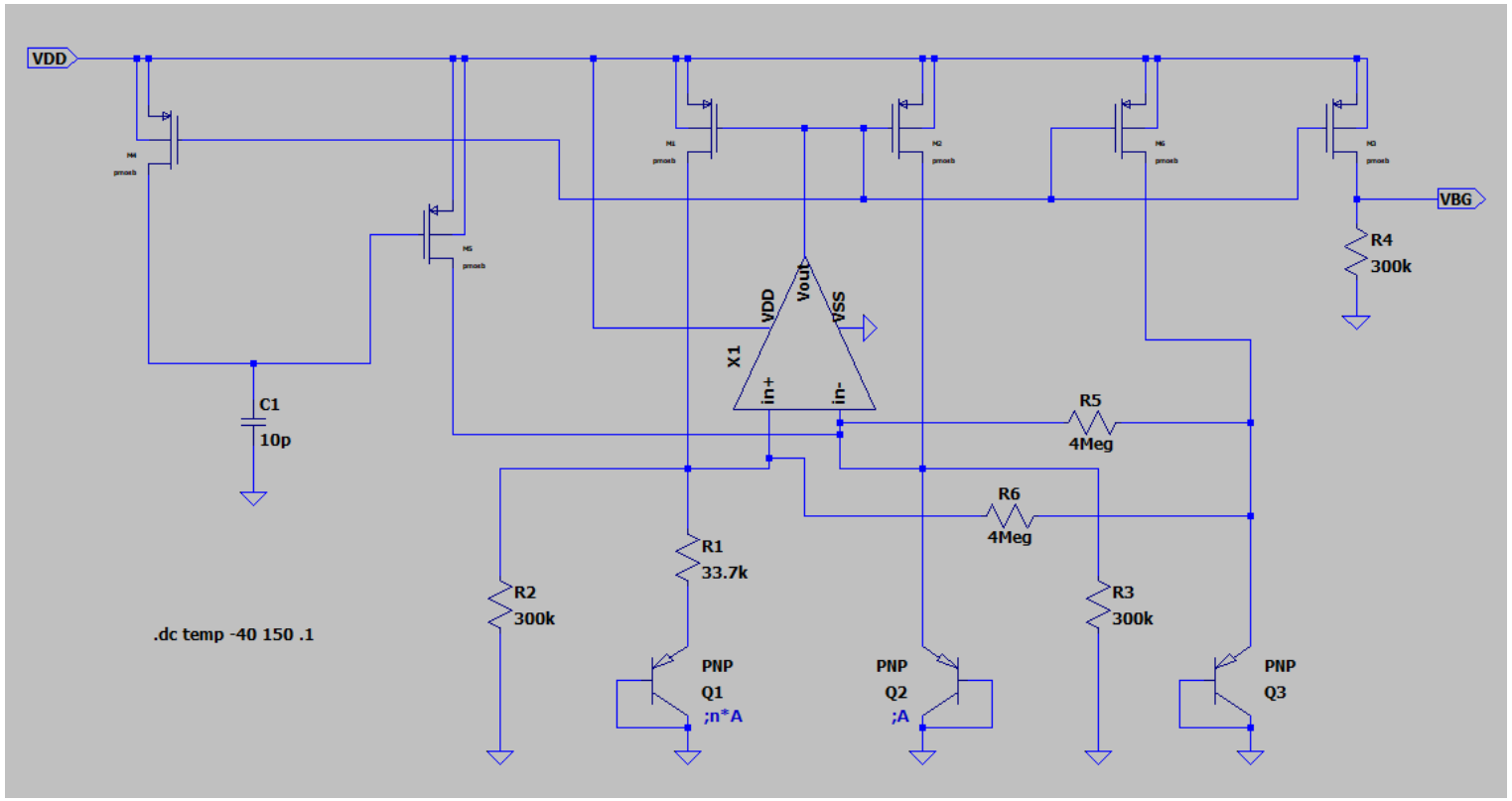

Figure 43. Banba 2nd order compensation bandgap

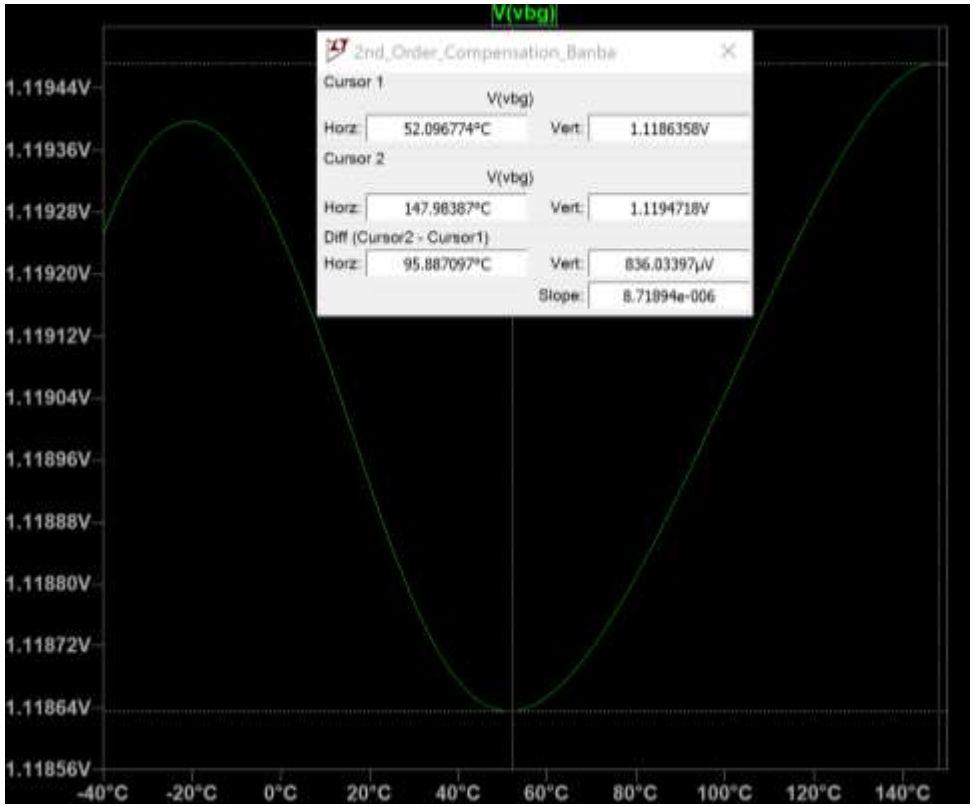

Figure 44. V_{BG} vs temperature

2nd order compensation

$$V_{BE} = \underbrace{V_{g0} - \frac{T}{T_k}\left[V_{g0} - V_{BE}(T_k)\right]}_{\text{linear therm}} - \underbrace{(\eta - \alpha) V_T \ln\left(\frac{T}{T_k}\right)}_{\text{non-linear therm}}$$

For the 2nd order compensation we need to eliminate the non-linear therm $(\eta - \alpha) V_T \ln\left(\frac{T}{T_k}\right)$ by generating another non-linear current but of opposite sign so they cancel.

$$R_{\text{non-linear}} = R_5 = R_6 \qquad (1)$$

$$V_{R_{\text{non-linear}}} = V_{BE_2} - V_{BE_3} = \Delta V_{BE} = V_T \cdot \ln\left(\frac{T}{T_0}\right) \qquad (2)$$

2nd order compensation

$$\overset{(1),(2)}{\Rightarrow} \quad I_{\text{non-linear}} = \frac{V_{R_{\text{non-linear}}}}{R_{\text{non-linear}}} = \frac{V_T}{R_{\text{non-linear}}} \cdot \ln\left(\frac{T}{T_0}\right)$$

By adding $I_{\text{non-linear}}$ to I_{REF} with PMOS mirror M6 ⇒ non-linear therm is canceled and we get a 2nd order compensation ⇒ less variation for V_{BG} across the given temperature domain.

Results

	Bandgap type	**OTA type**	**Quiescent current**	**Output voltage**	**Precision**	**PM**	**GM**
Specifications	Banba	Miller	30μA	1.2V	3%=36mV	>40deg	>10dB
Results	Banba	Miller	27μA	1.12V	721.9mV (0.9mV + 1mV + 720mV)	60deg	12dB

Table 4. Results

Thank you for your attention!